Littelfuse®
Expertise Applied | Answers Delivered

HRDB SERIES

Delay-on-Break Timer

Description

The HRDB Series combines an electromechanical, relay output with microcontroller timing circuitry. The HRDB offers 12 to 230V operation in five options and factory fixed, external, or onboard adjustable time delays with a repeat accuracy of ±0.5%. The isolated output contact rating allows for direct operation of heavy loads, such as compressors, pumps, blower motors, heaters, etc. The HRDB is ideal for OEM applications where cost is a factor.

Operation (Delay-on-Break)

Input voltage must be applied before and during timing. Upon closure of the initiate switch, the output relay energizes. The time delay begins when the initiate switch is opened. The output remains energized during timing. At the end of the time delay, the output de-energizes. The output will energize if the initiate switch is closed when input voltage is applied.

Reset: Reclosing the initiate switch during timing resets the time delay. Loss of input voltage resets the time delay and output.

Wiring Diagram

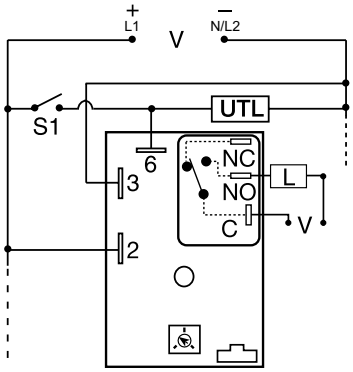

V = Voltage
S1 = Initiate Switch
L = Timed Load
UTL = Untimed Load (optional)
NO = Normally Open
C = Common, Transfer Contact

NOTE: A knob, or terminals 4 & 5 are only included on adjustable units. R_T is used when external adjustment is ordered. Relay contacts are isolated. Dashed lines are internal connections. The untimed load is optional.

Features & Benefits

FEATURES	BENEFITS
Microcontroller based	Repeat Accuracy + / - 0.5%
Compact, low cost design	Allows flexiblility for OEM applications
Isolated, 30A, SPDT, NO output contacts	Allows direct operation of heavy loads: compressors, pumps, blower moters, heaters.

Accessories

P1004-95, P1004-95-X Versa-Pot
Panel mountable, industrial potentiometer recommended for remote time delay adjustment.

P1023-6 Mounting bracket
The 90° orientation of mounting slots makes installation/removal of modules quick and easy.

P0700-7 Versa-Knob
Designed for 0.25 in (6.35 mm) shaft of Versa-Pot. Semi-gloss industrial black finish.

Ordering Information

MODEL	INPUT VOLTAGE	ADJUSTMENT	TIME TOLERANCE	TIME DELAY	MODEL	INPUT VOLTAGE	ADJUSTMENT	TIME TOLERANCE	TIME DELAY
HRDB1110M	12VDC	Fixed	+ / -5%	10m	HRDB223	24VAC	Onboard	+ / -5%	0.1 - 10m
HRDB117S	12VDC	Fixed	+ / -5%	7s	HRDB321	24VDC	Onboard	+ / -5%	1 - 100s
HRDB120	12VDC	Onboard	+ / -5%	0.1 - 10s	HRDB324	24VDC	Onboard	+ / -5%	1 - 100m
HRDB121	12VDC	Onboard	+ / -5%	1 - 100s	HRDB423	120VAC	Onboard	+ / -5%	0.1 - 10m
HRDB124	12VDC	Onboard	+ / -5%	1 - 100m	HRDB623	230VAC	Onboard	+ / -5%	0.1 - 10m
HRDB21A65M	24VAC	Fixed	+ / -1%	65m					

If you don't find the part you need, call us for a custom product 800-843-8848

© 2016 Littelfuse Protection Relays & Controls

Littelfuse
Expertise Applied | Answers Delivered

HRDB SERIES

Accessories

P1015-13 (AWG 10/12), **P1015-64** (AWG 14/16)
Female Quick Connect
These 0.25 in. (6.35 mm) female terminals are constructed with an insulator barrel to provide strain relief.

P1015-18 Quick Connect to Screw Adapter
Screw adapter terminal designed for use with all modules with 0.25 in. (6.35 mm) male quick connect terminals.

C103PM (AL) DIN Rail
35 mm aluminum DIN rail available in a 36 in. (91.4 cm) length.

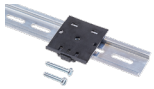

P1023-20 DIN Rail Adapter
Allows module to be mounted on a 35 mm DIN type rail with two #10 screws.

External Resistance vs. Time Delay

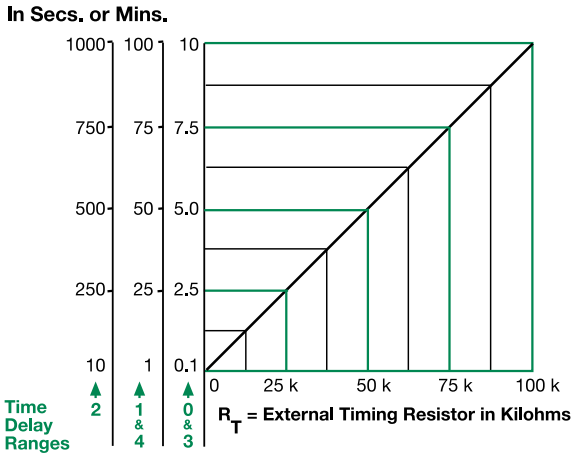

This chart applies to externally adjustable part numbers.
The time delay is adjustable over the time delay range selected by varying the resistance across the R_T terminals; as the resistance increases the time delay increases.
When selecting an external R_T, add the tolerances of the timer and the R_T for the full time range adjustment.
Examples: 1 to 50 S adjustable time delay, select time delay range 1 and a 50 K ohm R_T. For 1 to 100 S use a 100 K ohm R_T.

Function Diagram

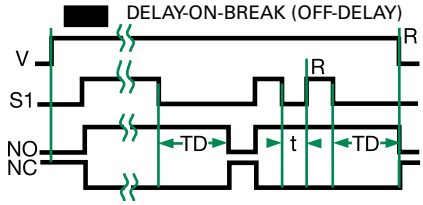

V = Voltage
S1 = Initiate Switch
NO = Normally Open Contact
NC = Normally Closed Contact
TD = Time Delay
t = Incomplete Time Delay
R = Reset
= Undefined Time

Specifications

Time Delay			
Type	Microcontroller circuitry		
Range	0.1s - 100m in 5 adjustable ranges or fixed		
Repeat Accuracy	±0.5 % or 20ms, whichever is greater		
Tolerance (Factory Calibration)	±1%, ±5%		
Reset Time	≤ 150ms		
Initiate Time	≤ 20ms		
Time Delay vs Temp. & Voltage	±2%		
Input			
Voltage	12 or 24VDC; 24, 120, or 230VAC		
Tolerance			
12VDC & 24VDC	-15% - 20%		
24 to 230VAC	-20% - 10%		
AC Line Frequency	50/60 Hz		
Power Consumption	AC ≤ 4VA; DC ≤ 2W		
Output			
Type	Electromechanical relay		
Form	Isolated, SPDT		
Ratings		**SPDT-NO**	**SPDT-NC**
General Purpose	125/240VAC	30A	15A
Resistive	125/240VAC	30A	15A
	28VDC	20A	10A
Motor Load	125VAC	1 hp*	1/4 hp**
	240VAC	2 hp**	1 hp**
Life	Mechanical - 1 x 10^6; Electrical - 1 x 10^5, *3 x 10^4, **6,000		
Protection			
Surge	IEEE C62.41-1991 Level A		
Circuitry	Encapsulated		
Dielectric Breakdown	≥ 2000V RMS terminals to mounting surface		
Insulation Resistance	≥ 100 MΩ		
Polarity	DC units are reverse polarity protected		
Mechanical			
Mounting	Surface mount with one #10 (M5 x 0.8) screw		
Dimensions	**H** 50.8 mm (2"); **W** 50.8 mm (2"); **D** 38.1 mm (1.51")		
Termination	0.25 in. (6.35 mm) male quick connect terminals		
Environmental			
Operating/Storage Temperature	-40° to 60°C / -40° to 85°C		
Humidity	95% relative, non-condensing		
Weight	≅ 3.9 oz (111 g)		

© 2016 Littelfuse Protection Relays & Controls