Thyristor Module

3~ Rectifier		
V_{RRM}	=	1800 V
I_{DAV}	=	120 A
I_{FSM}	=	500 A

3~ Rectifier Bridge, half-controlled (high-side) + free wheeling Diode

Part number

MCMA120UJ1800ED

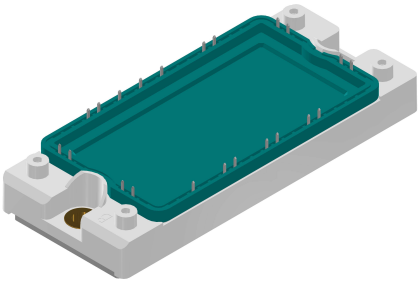

Backside: isolated

E72873

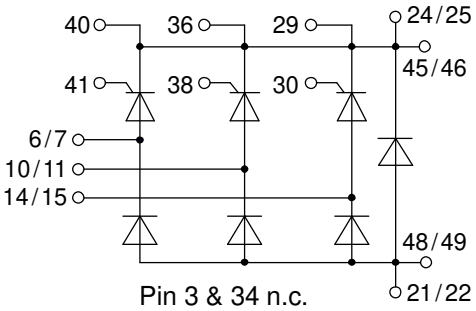

Features / Advantages:

- Thyristor/Standard Rectifier for line frequency
- Planar passivated chips
- Long-term stability
- Low forward voltage drop
- Leads suitable for PC board soldering
- Copper base plate with Direct Copper Bonded Al2O3-ceramic
- Improved temperature and power cycling

Applications:

- Diode for main rectification
- For single and three phase bridge configurations
- Supplies for DC power equipment
- Input rectifiers for PWM inverter
- Battery DC power supplies
- Field supply for DC motors

Package: E2-Pack

- Isolation Voltage: 3600 V~
- Industry standard outline
- RoHS compliant
- Soldering pins for PCB mounting
- Height: 17 mm
- Base plate: Copper internally DCB isolated
- Advanced power cycling
- Phase Change Material available

Disclaimer Notice

Information furnished is believed to be accurate and reliable. However, users should independently evaluate the suitability of and test each product selected for their own applications. Littelfuse products are not designed for, and may not be used in, all applications. Read complete Disclaimer Notice at www.littelfuse.com/disclaimer-electronics.

© 2020 IXYS all rights reserved

Rectifier				Ratings			
Symbol	**Definition**	**Conditions**		**min.**	**typ.**	**max.**	**Unit**
$V_{RSM/DSM}$	*max. non-repetitive reverse/forward blocking voltage*		T_{VJ} = 25°C			1900	V
$V_{RRM/DRM}$	*max. repetitive reverse/forward blocking voltage*		T_{VJ} = 25°C			1800	V
$I_{R/D}$	*reverse current, drain current*	$V_{R/D}$ = 1800 V	T_{VJ} = 25°C			50	µA
		$V_{R/D}$ = 1800 V	T_{VJ} = 125°C			10	mA
V_T	*forward voltage drop*	I_T = 40 A	T_{VJ} = 25°C			1.33	V
		I_T = 120 A				1.70	V
		I_T = 40 A	T_{VJ} = 125°C			1.36	V
		I_T = 120 A				1.88	V
I_{DAV}	*bridge output current*	T_C = 80°C	T_{VJ} = 150°C			120	A
		rectangular d = ⅓					
V_{T0}	*threshold voltage* } *for power loss calculation only*		T_{VJ} = 150°C			0.83	V
r_T	*slope resistance*					13.6	mΩ
R_{thJC}	*thermal resistance junction to case*					0.65	K/W
R_{thCH}	*thermal resistance case to heatsink*				0.1		K/W
P_{tot}	*total power dissipation*		T_C = 25°C			190	W
I_{TSM}	*max. forward surge current*	t = 10 ms; (50 Hz), sine	T_{VJ} = 45°C			500	A
		t = 8,3 ms; (60 Hz), sine	V_R = 0 V			540	A
		t = 10 ms; (50 Hz), sine	T_{VJ} = 150°C			425	A
		t = 8,3 ms; (60 Hz), sine	V_R = 0 V			460	A
I^2t	*value for fusing*	t = 10 ms; (50 Hz), sine	T_{VJ} = 45°C			1.25	kA²s
		t = 8,3 ms; (60 Hz), sine	V_R = 0 V			1.22	kA²s
		t = 10 ms; (50 Hz), sine	T_{VJ} = 150°C			905	A²s
		t = 8,3 ms; (60 Hz), sine	V_R = 0 V			880	A²s
C_J	*junction capacitance*	V_R = 400 V f = 1 MHz	T_{VJ} = 25°C		18		pF
P_{GM}	*max. gate power dissipation*	t_P = 30 µs	T_C = 150°C			10	W
		t_P = 300 µs				5	W
P_{GAV}	*average gate power dissipation*					0.5	W
$(di/dt)_{cr}$	*critical rate of rise of current*	T_{VJ} = 150°C; f = 50 Hz repetitive, I_T = 120 A				100	A/µs
		t_P = 200 µs; di_G/dt = 0.45 A/µs;					
		I_G = 0.45 A; V = ⅔ V_{DRM} non-repet., I_T = 40 A				500	A/µs
$(dv/dt)_{cr}$	*critical rate of rise of voltage*	V = ⅔ V_{DRM}	T_{VJ} = 150°C			1000	V/µs
		R_{GK} = ∞; method 1 (linear voltage rise)					
V_{GT}	*gate trigger voltage*	V_D = 6 V	T_{VJ} = 25°C			1.4	V
			T_{VJ} = -40°C			1.6	V
I_{GT}	*gate trigger current*	V_D = 6 V	T_{VJ} = 25°C			70	mA
			T_{VJ} = -40°C			150	mA
V_{GD}	*gate non-trigger voltage*	V_D = ⅔ V_{DRM}	T_{VJ} = 150°C			0.2	V
I_{GD}	*gate non-trigger current*					5	mA
I_L	*latching current*	t_p = 10 µs	T_{VJ} = 25°C			150	mA
		I_G = 0.45 A; di_G/dt = 0.45 A/µs					
I_H	*holding current*	V_D = 6 V R_{GK} = ∞	T_{VJ} = 25°C			100	mA
t_{gd}	*gate controlled delay time*	V_D = ½ V_{DRM}	T_{VJ} = 25°C			2	µs
		I_G = 0.45 A; di_G/dt = 0.45 A/µs					
t_q	*turn-off time*	V_R = 100 V; I_T = 40A; V = ⅔ V_{DRM}	T_{VJ} = 125 °C		500		µs
		di/dt = 10 A/µs dv/dt = 20 V/µs t_p = 200 µs					

© 2020 IXYS all rights reserved

Package	E2-Pack			Ratings			
Symbol	**Definition**	**Conditions**		**min.**	**typ.**	**max.**	**Unit**
I_{RMS}	*RMS current*	per terminal				50	A
T_{VJ}	*virtual junction temperature*			-40		150	°C
T_{op}	*operation temperature*			-40		125	°C
T_{stg}	*storage temperature*			-40		125	°C
Weight					176		g
M_D	*mounting torque*			3		6	Nm
$d_{Spp/App}$	*creepage distance on surface | striking distance through air*		*terminal to terminal*	6.0			mm
$d_{Spb/Apb}$			*terminal to backside*	12.0			mm
V_{ISOL}	*isolation voltage*	t = 1 second	50/60 Hz, RMS; I_{ISOL} ≤ 1 mA	3600			V
		t = 1 minute		3000			V

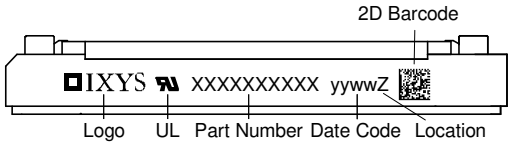

Part description

M = Module
C = Thyristor (SCR)
M = Thyristor
A = (up to 1800V)
120 = Current Rating [A]
UJ = 3~ Rectifier Bridge, half-controlled (high-side) + free wheeling Diode
1800 = Reverse Voltage [V]
ED = E2-Pack

Ordering	Ordering Number	Marking on Product	Delivery Mode	Quantity	Code No.
Standard	MCMA120UJ1800ED	MCMA120UJ1800ED	Box	6	510125

Equivalent Circuits for Simulation

** on die level* T_{VJ} = 150°C

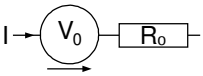

Thyristor

$V_{0\,max}$	*threshold voltage*	0.83	V
$R_{0\,max}$	*slope resistance **	10.5	mΩ

© 2020 IXYS all rights reserved

Outlines E2-Pack

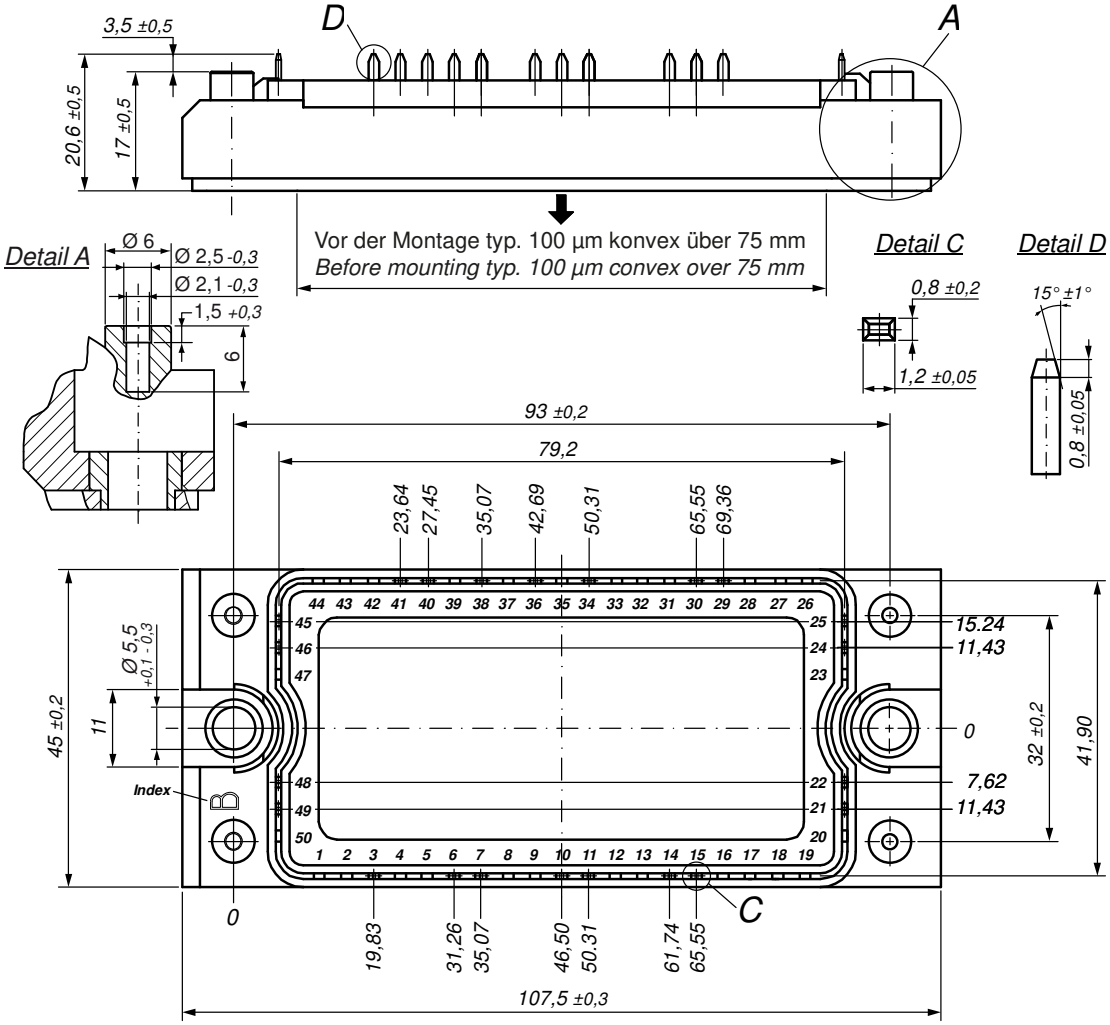

Bemerkung / ***Note:***

- Nichttolerierte Maße nach / *Measure without tolerances according DIN ISO 2768-T1-m*
- PCB-Lochmuster / *PCB hole pattern:* **see pin position**
- Toleranz Pin-Position und PCB-Lochmuster / *Tolerance of pin position and PCB hole pattern:* ⊕ **0.1**
- Montageanleitung / *Mounting instruction:* www.ixys.com **Application note IXAN0024**

Detail A: PCB-Montage / *Mounting on PCB* ⌊

- Empfohlene, selbstschneidende Schraube / *Recommended, self-tapping screw:* **EJOT PT®** (Größe / *size:* **K25**) ⌊
- Max. Schraubenlänge / *Max. screw length:* **PCB-Dicke** / **thickness + 6 mm** *(*max. Lochtiefe / *hole depth)* ⌊
- Empfohlenes Drehmoment / *Recommended mounting torque:* **1.5 Nm**

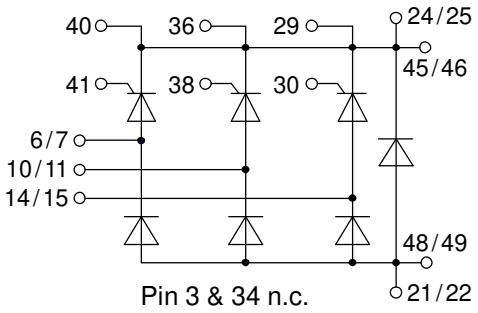

© 2020 IXYS all rights reserved

Thyristor

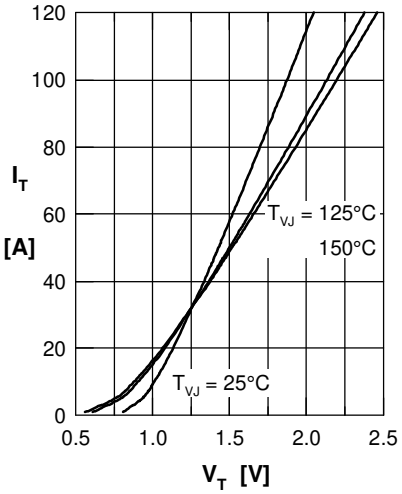

Fig. 1 Forward characteristics

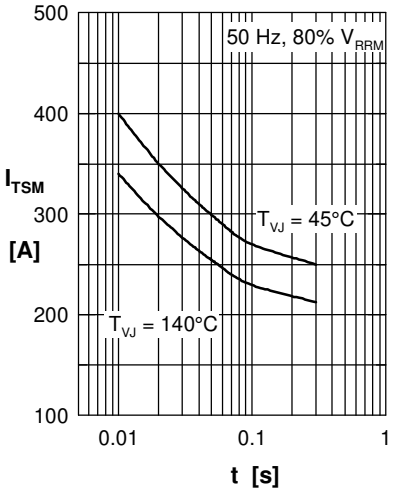

Fig. 2 Surge overload current
I_{TSM}: crest value, t: duration

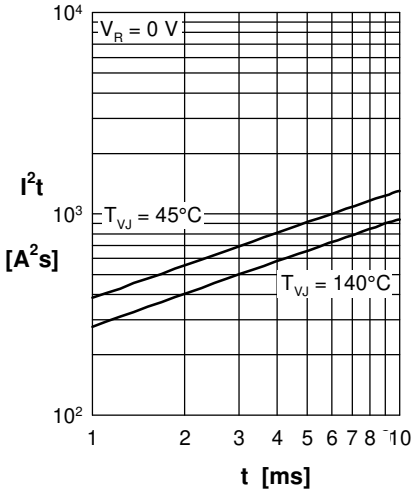

Fig. 3 I^2t versus time (1-10 s)

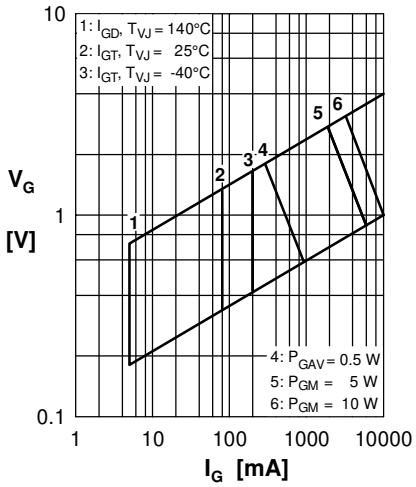

Fig. 4 Gate voltage & gate current

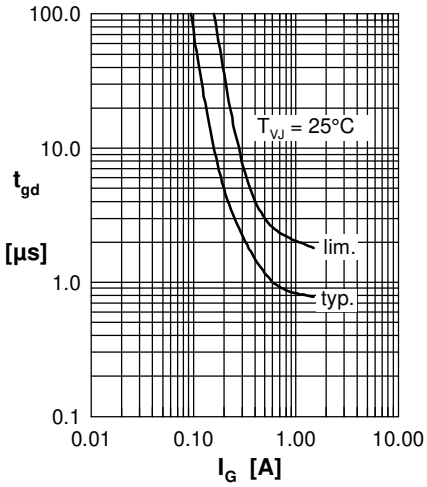

Fig. 5 Gate controlled delay time t_{gd}

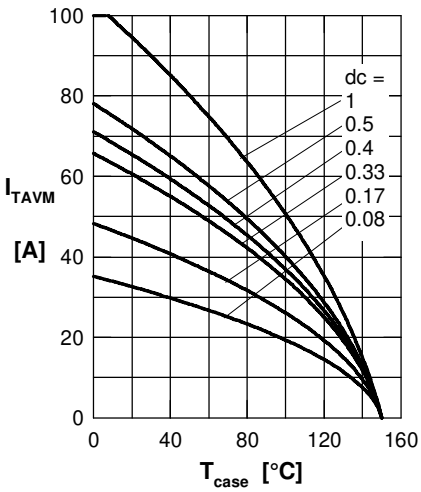

Fig. 6 Max. forward current at case temperature

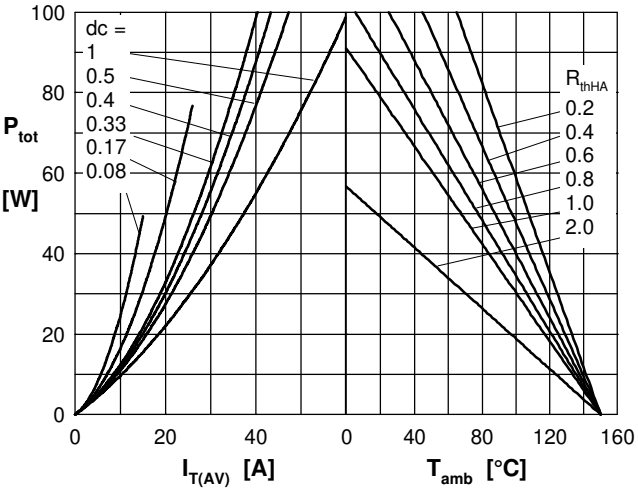

Fig. 7a Power dissipation versus direct output current
Fig. 7b and ambient temperature

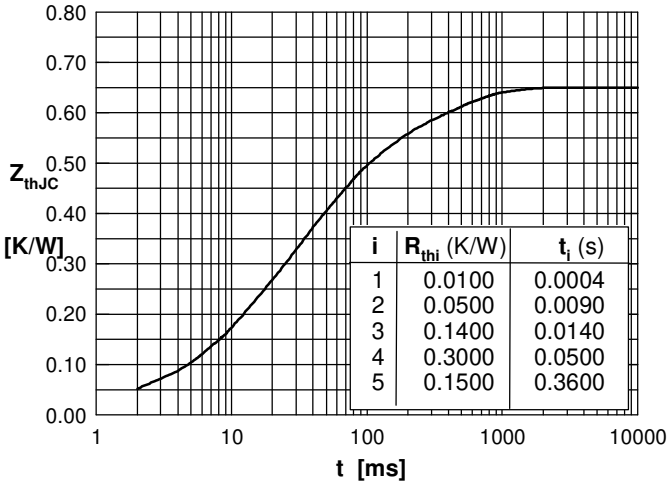

i	R_{thi} (K/W)	t_i (s)
1	0.0100	0.0004
2	0.0500	0.0090
3	0.1400	0.0140
4	0.3000	0.0500
5	0.1500	0.3600

Fig. 8 Transient thermal impedance junction to case

© 2020 IXYS all rights reserved