481 Series Alarm Indicating Fuse

Description

481 Series alarm indicating fuses are designed to reduce down time by immediately pinpointing the blown (open) circuit while triggering an LED or audio alarm. This item requires 482 Series mating fuse holder.

All ranges of 481 Series fuses are available as our original design, and the 2-20 amp range is now available as a RoHS compliant option (use the "P" designator when ordering). See the part numbering section of this data sheet for related ordering instructions.

Agency Approvals

Agency	Agency File Number	
	E71611	0.180A - 20A
	29862	0.180A - 20A

Features

- Color-coded indicator flags indicate ampere rating.
- Clear plastic lens option available for additional safety.
- RoHS compliant
- Body is constructed of black plolyphenylene sulfide with UL 94 V-0 flammability rating.
- Contacts made of bright alloy-plated beryillium copper.

Electrical Characteristics

% of Ampere Rating	Opening Time
100%	10 Minutes, Minimum
150%	5 Minutes, Maximum

Applications

Ideal for telecommunications and control panel circuits

Electrical Characteristics

Ampere Rating (A)	Amp Code	Max Voltage Rating (V)	Interrupting Rating	Body Color Code	Nominal Cold Resistance (Ohms)	Nominal Melting I^2t (A^2 Sec.)	Agency Approvals	
0.180*	.180	125 VAC & 125 VDC	40A @ 175 VDC	Yellow	6.25	0.0400	x	x
0.200*	.200			Red/Black	5.70	0.0576	x	x
0.250*	.250			Violet	4.20	0.0625	x	x
0.375*	.375			Gray/White	2.00	0.230	x	x
0.500*	.500			Red	1.52	0.490	x	x
0.650*	.650		450A @ 60 VDC 300A @ 125 VAC (up to 20A) 300A @ 125 VDC (up to 15A) 200A @ 125 VDC (up to 20A) 460A @ 60 VDC (up to 15A)	Black	1.25	0.723	x	x
0.750*	.750			Brown	.980	1.32	x	x
1.00*	001.			Gray	.665	1.82	x	x
1.33*	1.33			White	.480	3.13	x	x
1.50*	01.5			Yellow/White	.385	2.55	x	x
2.00	002.			Orange	.120	10.2	x	x
2.50	02.5			Orange/White	0.093	16.0	x	x
3.00	003.			Blue	.0670	25.0	x	x
3.50	03.5			Blue/White	.0415	10.5	x	x
4.00	004.			Brown/White	.0350	36.0	x	x
5.00	005.			Green	.0285	64.0	x	x
7.50	07.5			White/Black	.0113	121.0	x	x
10.0	010.			White/Red	.00840	380.3	x	x
12.0	012.			Yellow/Green	.00660	571.2	x	x
15.0	015.			Blue/Red	.00580	900.0	x	x
20.0**	020.			White/Green	.00394	1024.0	x	x

* 0.180A thru 1.5A items are not available for sale as a RoHS compliant "P" option
**20A Fuseholder must be used. Fuse is keyed to prevent insertion in lower rated holders.
20A Fuseholder is designed to accept all ratings up to 20 amperes.

© 2018 Littelfuse, Inc.
Specifications are subject to change without notice.
Revised: 06/14/18

Product Characteristics

Material	Body: Polyphenylene Sulfide (UL 94VO) Terminations: Beryllium Copper/Tin Plated Optional Lens: Nylon
Vibration	MIL-STD-202 Method 201

Operating Temperature	– 55°C to 125°C.
Thermal Shock	Withstands 5 cycles of – 55°C to 125°C
Insulation Resistance (After Opening)	Greater than 10,000 ohms.

Dimensions

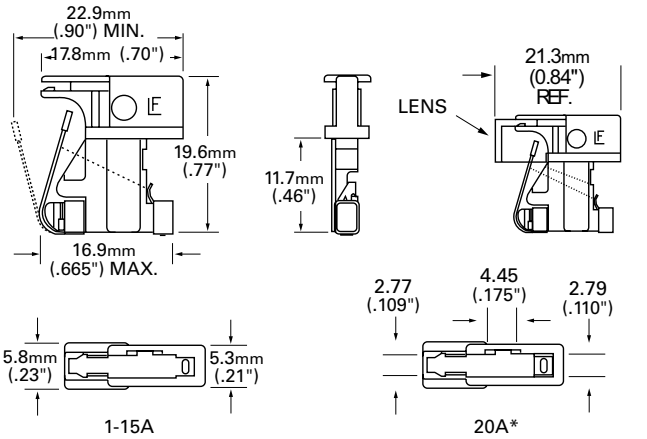

*20A Fuseholder must be used. Fuse is keyed to prevent insertion in lower rated holders. 20A Fuseholder is designed to accept all ratings up to 20 amperes.

Average Time Current Curves

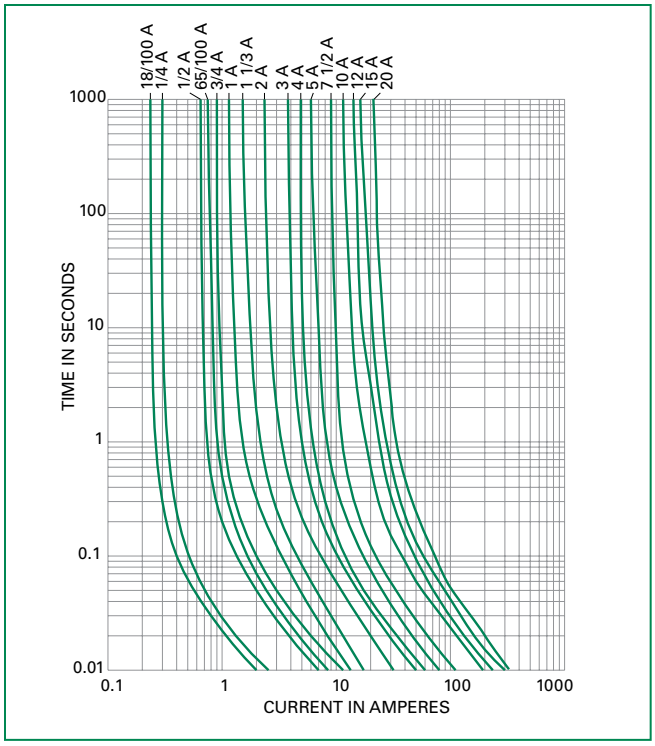

Part Numbering System

0481 .180 H XL M P

- **RoHS ITEM OPTION CODE:**
  - Blank = Standard design item
  - P = RoHS compliant version item (available in 2-20 Amp Range only)
- **AMPERAGE STAMPING MARK:**
  - Blank = Standard design item
  - M = Front Side
- **ACCESSORY:**
  - Blank = Standard design item
  - X = Filler
  - XL = Protective Lens
- **QUANTITY CODE:**
  - V = 5 pack
  - H = 100 pack
- **AMP COLOR CODE:**
  - (See Electrical Characteristics Table)
- **FUSE SERIES**

Additional Information

Datasheet | **Resources** | **Samples**

Disclaimer Notice - Information furnished is believed to be accurate and reliable. However, users should independently evaluate the suitability of and test each product selected for their own applications. Littelfuse products are not designed for, and may not be used in, all applications. Read complete Disclaimer Notice at: www.littelfuse.com/disclaimer-electronics.

© 2018 Littelfuse, Inc.
Specifications are subject to change without notice.

Revised: 06/14/18