Surface Mount Fuses

Ceramic Fuse > 806 Series

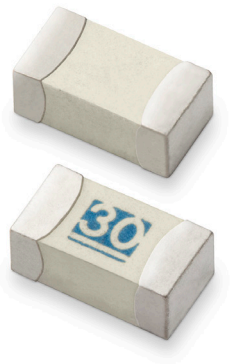

Description

The 806 Series fuse is designed specifically to provide overcurrent protection to circuits that operate under high working ambient temperature up to 150 °C.

Its design ensures excellent temperature stability and performance reliability. The high I^2t values which is typical in the Littelfuse Ceramic Fuse family ensure high inrush current withstand capability.

Features & Benefits

- Recognized to UL/CSA/NMX 248-1 and UL/CSA/NMX 248-14
- Operating Temperature from -55 °C to +150 °C
- Designed to provide over-current protection in high current Voltage Regulator Module (VRM) applications
- 100% Lead-free, RoHS compliant, and Halogen-free
- Suitable for both leaded and lead-free reflow/wave soldering
- High current ratings in small size
- High performance materials provide improved performance in elevated ambient temperature application
- Avoids nuisance opening due to high inrush and surge current inherent in the system

Additional Information

Resources | Accessories | Samples

Applications

- Voltage Regulator Module (VRM) equipment
- Notebook PC
- DC-DC converter
- Power tool

Agency Approvals

Agency	Agency File Number	Ampere Range
c UL us	E10480	20 A – 30 A

Electrical Characteristics

% of Ampere Rating	Ampere Rating	Opening Time at 25 °C
100%	20 A – 30 A	4 hours, Minimum
250%	20 A – 30 A	5 seconds, Maximum

Electrical Specifications

Ampere Rating (A)	Amp Code	Max Voltage Rating (V)	Interrupting Rating (AC/DC)[1]	Nominal Resistance (Ohms)[2]	Nominal Melting I^2t (A^2sec)[3]	Nominal Voltage Drop At Rated Current (V)[4]	Nominal Power Dissipation At Rated Current (W)	Agency Approvals c UL us
20	020.	36	250 A @ 24 VDC 200 A @ 36 VDC	0.00290	65	0.0938	1.8760	x
25	025.			0.00219	110	0.0877	2.1925	x
30	030.		300 A @ 24 VDC 200 A @ 36 VDC	0.00174	170	0.0948	2.8440	x

Notes:

1. DC Interrupting Rating tested at rated voltage with time constant < 0.1 msec.

2. Nominal Resistance measured with <10% rated current.

3. Nominal Melting I^2t measured at 1 msec. opening time. For other I^2t data refer to chart.

4. Nominal Voltage Drop measured at rated current after temperature has stabilized and with fuse mounted on board with 3 oz Cu trace.

- Devices are designed to carry rated current for hours minimum. It is recommended that devices be operated continuously at no more than 80% rated current. See 'Temperature Re-rating Curve' for additional re-rating information.
- Devices are designed to be mounted with marking code facing up.

© 2022 Littelfuse, Inc.
Specifications are subject to change without notice.
Revised: BT.06/21/22

Surface Mount Fuses

Ceramic Fuse > 806 Series

Temperature Re-rating Curve

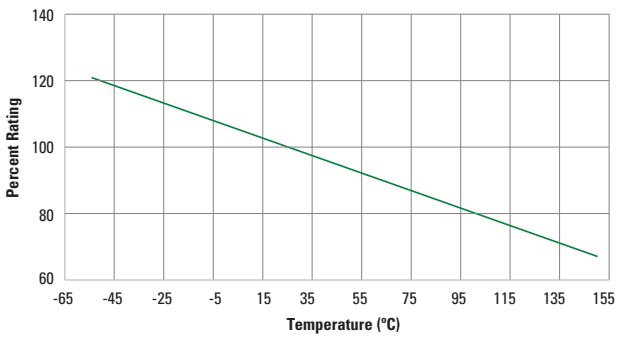

Notes:
1. Re-rating depicted in this curve is in addition to the standard re-rating of 20% for continuous operation.
Example: For continuous operation at 75 °C, the fuse should be rerated as follows: $I = (0.80)(0.85)I_{RAT} = (0.68)I_{RAT}$

Average Time Current Curves

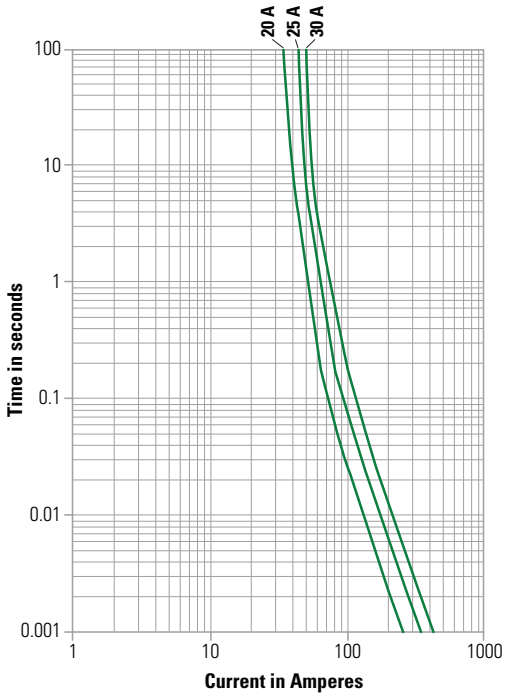

Product Characteristics

Materials	**Body:** Advanced Ceramic **Terminations:** Ag/Ni/Sn (100% Lead-free)
Moisture Sensitivity Level	IPC/JEDEC J-STD-020, Level 1
Solderability	IPC/ECA/JEDEC J-STD-002D
Biased Humidity Test	JESD22-A110-B
Resistance to Solvents	MIL-STD-202, Method 215
Moisture Resistance	MIL-STD-202, Method 106G
Thermal Shock	MIL-STD-202, Method 107G
Mechanical Shock	MIL-STD-202, Method 213B
Vibration Low Frequency	MIL-STD-202, Method 201A
Vibration High Frequency	MIL-STD-202, Method 204, Condition D
Dissolution of Metallization	IPC/EIC/JEDEC J-STD-002B, Condition D
Terminal Strength	IEC 60127-4

© 2022 Littelfuse, Inc.
Specifications are subject to change without notice.
Revised: BT.06/21/22

Surface Mount Fuses

Ceramic Fuse > 806 Series

Soldering Perameters

Reflow Condition		Pb – Free assembly
Pre Heat	**- Temperature Min ($T_{s(min)}$)**	150 °C
	- Temperature Max ($T_{s(max)}$)	200 °C
	- Time (Min to Max) (t_s)	60–180 secs
Average ramp up rate (Liquidus Temp (T_L) to peak		5 °C/second max.
$T_{S(max)}$ to T_L - Ramp-up Rate		5 °C/second max.
Reflow	**- Temperature (T_L) (Liquidus)**	217 °C
	- Temperature (t_L)	60–150 secs
Peak Temperature (T_P)		260+0/–5 °C
Time within 5 °C of actual peak Temperature (t_p)		10–30 seconds
Ramp-down Rate		6 °C/second max.
Time 25 °C to peak Temperature (T_P)		8 minutes max.
Do not exceed		260 °C

Wave Soldering Parameters	260 °C Peak Temperature, 10 seconds max.

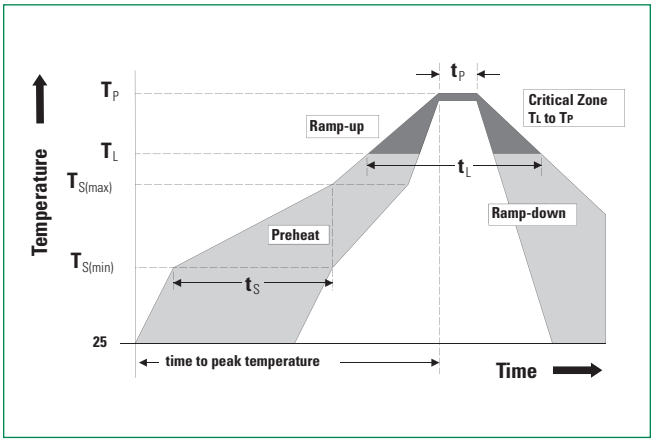

Dimensions

Measurements are in mm [inch]

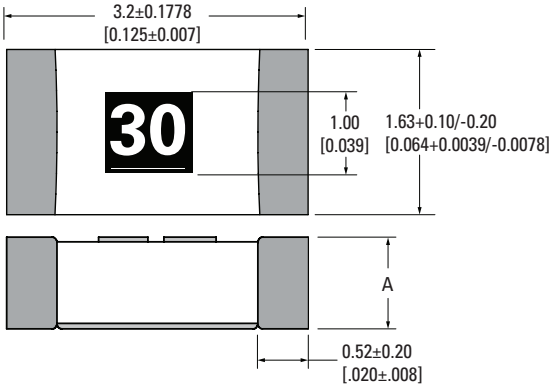

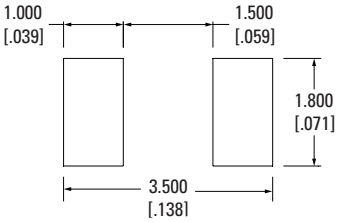

Ampere Rating	A (mm)
20 A	1.01± 0.101
25 A	1.11±0.111
30 A	1.21±0.121

Part Marking System

Ampere Rating	Marking Code
020	20
025	25
030	30

Part Numbering System

0806 030. W R

Series

Amp Code

Quantity Code
W = 3000 pcs.

Packing Code
R = Reel Pack

Packaging

Packaging Option	Packaging Specification	Quantity	Quantity & Packaging Code
8mm Tape and Reel	EIA-481, IEC 60286, Part 3	3000	WR

Disclaimer Notice - Information furnished is believed to be accurate and reliable. However, users should independently evaluate the suitability of and test each product selected for their own applications. Littelfuse products are not designed for, and may not be used in, all applications. Read complete Disclaimer Notice at http://www.littelfuse.com/disclaimer-electronics.

© 2022 Littelfuse, Inc.
Specifications are subject to change without notice.
Revised: BT.06/21/22