Littelfuse®
Expertise Applied | Answers Delivered

FNY SERIES IN-LINE UNIVERSAL GLASS STYLE FUSE HOLDERS

Description

FNY Series In-line Universal Glass Style Fuse Holders are designed for SFE, AGA, AGC, AGW, and AGX Glass Type automotive fuses. Simple twist-lock knob and body design allows for easy fuse installation and replacement. Standard Duty version fit for traditional automotive and commercial vehicle accessory circuits (lighting, displays, communications, etc). Heavy Duty version fit for air conditioner, heater blower motors, and other higher load applications.

Web Resources

Download 2D print and technical resources at:
littelfuse.com/FNY

Recommended Fuses

SFE and AG_ Glass Fuses

1-60A Automotive Glass Body Fuses

Features and Benefits

- Standard Duty - 8" looped UL 1015 wire leds for cut and install in-line installation
- Heavy Duty - Two 4" GXL wire leads for easy in-line installation
- Accepts SFE, AGA, AGC, AGW, and AGX Series Glass Fuses
- Spring-loaded twist-lock body for easy fuse installation and replacement
- Weather resistant nylon body

Applications

- Accessory lighting, displays, communications equipment
- Air conditioner, blower motors

Specifications Overview

Max Voltage:	32V DC
Operating Temp:	-40° C to + 80° C

Dimension in MM

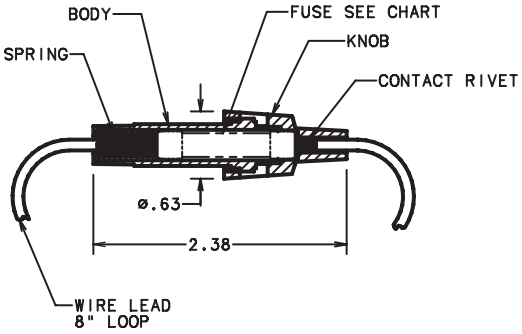

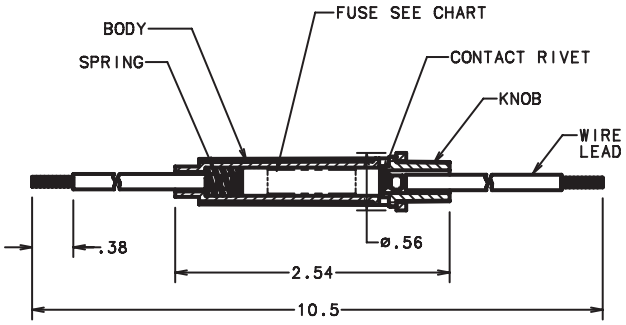

Ordering Information

PART NUMBER	DESCRIPTION	MAX FUSE RATING	WIRE SIZE	COLOR
0FNY0001XP	In-line Universal Glass Style Fuse Holder - Carded Retail Package	20A	14 AWG UL 1015	Black
0FNY0001ZXJ	In-line Universal Glass Style Fuse Holder - Bulk	20A	14 AWG UL 1015	Black
0FNY0002ZXJ	Heavy Duty In-line Universal Glass Style Fuse Holder - Bulk	30A	12 AWG GXL	Orange
0FNY0020XP	In-line Universal Glass Style Fuse Holder with 20A Fuse - Carded Retail Package	20A	14 AWG UL 1015	Black
0FNY0030XP	Heavy Duty In-line Universal Glass Style Fuse Holder with 30A Fuse - Carded Retail Package	30A	12 AWG GXL	Orange

© 2019 Littelfuse Commercial Vehicle Products
Rev: 041519