RESISTANCE/TEMPERATURE TABLE			
TEMP (°C)	RESIS (Ω NOM)	TEMP (°C)	RESIS (Ω NOM)
-40	16,161,000	45	216,220
-35	11,765,000	50	177,690
-30	8,634,400	55	146,780
-25	6,392,200	60	121,850
-20	4,774,800	65	101,630
-15	3,599,400	70	85,158
-10	2,738,100	75	71,662
-5	2,101,200	80	60,553
0	1,625,800	85	51,365
5	1,267,500	90	43,732
10	995,100	95	37,364
15	786,350	100	32,032
20	625,200	105	27,550
25	500,000	110	23,772
30	402,140	115	20,577
35	325,230	120	17,868
40	264,470	125	15,566

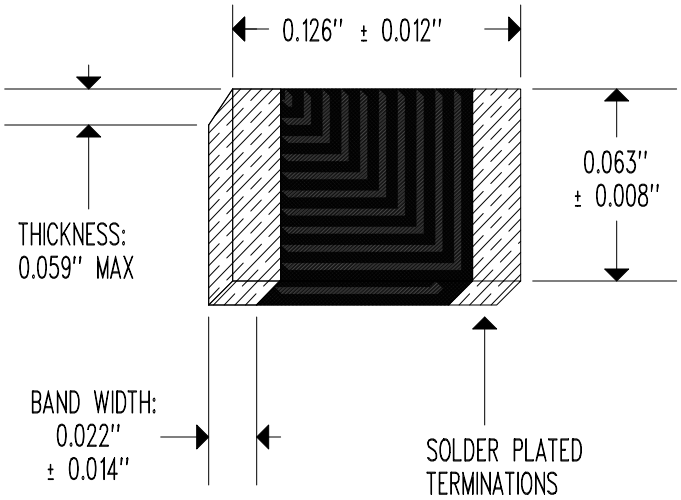

RESISTANCE @ +25°C = 500,000 Ω ± 5%
BETA "β" (+25 TO +85°C) = 4050°K NOMINAL
POWER RATING = 320 mW
OPERATING TEMPERATURE RANGE = -40 TO +125°C

PACKAGING: SEE TABLE

SEE MANUFACTURING SPECIFICATION (LAYER 1)

PART NUMBER	PACKAGING
LR504M0J-1	BULK
LR504M0J-2	TAPE & REEL

REV	REVISION RECORD	DATE	APP
NONE	RELEASE TO PRODUCTION	11/10/17	MW

SCALE NONE

DRAWN BY
MARCUS WEAST

DATE 11/10/17

REV. NONE

LAYER 0 OF 2

U.S. SENSOR CORP.

© COPYRIGHT

714-639-1000 www.ussensor.com

NTC THERMISTOR

P/N LR504M0J