FUSEOLOGY

Selection Guide

Fuse Characteristics, Terms and Consideration Factors

Littelfuse®

Expertise Applied | Answers Delivered

FUSEOLOGY Selection Guide Fuse Characteristics, Terms and Consideration Factors

ABOUT THIS GUIDE

Fuses are current-sensitive devices that provide reliable protection for discrete components or circuits by melting under current overload conditions. Choosing the right fuse for your application can be an overwhelming, time-consuming process, even for a seasoned electronics design engineer. This user-friendly Fuseology Selection Guide makes the fuse selection process quick and easy-helping you optimize the reliability and performance of the application.

Table of Contents	Page
Fuse Characteristics, Terms and Consideration Factors	2–4
Fuse Selection Checklist	5–7
PTC Characteristics and Terms	8–9
PTC Product Applications	10
Typical PTC Circuit Protection Designs	11
Standards	12–14
PTC Selection Worksheet	15
Fuse and PTC Products Selection Guide	16–18
Packaging and Part Numbering	19
Legal Disclaimers	20

© 2014 Littelfuse, Inc.

Specifications descriptions and illustrative material in this literature are as accurate as known at the time of publication, but are subject to changes without notice. Visit **littelfuse.com** for more information.

Fuse Characteristics, Terms and Consideration Factors

The purpose of this introductory section is to promote a better understanding of both fuses and common application details within circuit design.

The fuses to be considered are current sensitive devices designed to serve as the intentional weak link in the electrical circuit. Their function is to provide protection of discrete components, or of complete circuits, by reliably melting under current overload conditions. This section will cover some important facts about fuses, selection considerations and standards.

The application guidelines and product data in this guide are intended to provide technical information that will help with application design. *The fuse parameters and application concepts presented should be well understood in order to properly select a fuse for a given application.*

Since these are only a few of the contributing parameters, application testing is strongly recommended and should be used to verify performance in the circuit / application.

Littelfuse reserves the right to make changes in product design, processes, manufacturing location and information without notice. For current Littelfuse product infomation, please visit our web site at www.littelfuse.com.

AMBIENT TEMPERATURE: Refers to the temperature of the air immediately surrounding the fuse and is not to be confused with "room temperature." The fuse ambient temperature is appreciably higher in many cases, because it is enclosed (as in a panel mount fuseholder) or mounted near other heat producing components, such as resistors, transformers, etc.

BREAKING CAPACITY: Also known as interrupting rating or short circuit rating, this is the maximum approved current which the fuse can safely break at rated voltage. Please refer to the INTERRUPTING RATING definition of this section for additional information.

CURRENT RATING: The nominal amperage value of the fuse. It is established by the manufacturer as a value of current which the fuse can carry, based on a controlled set of test conditions (See RERATING section).

Catalog Fuse part numbers include series identification and amperage ratings. Refer to the FUSE SELECTION CHECKLIST section for guidance on making the proper choice.

RERATING: For 25ºC ambient temperatures, it is recommended that fuses be operated at no more than 75% of the nominal current rating established using the controlled test conditions. These test conditions are part of UL/CSA/ANCE (Mexico) 248-14 "Fuses for Supplementary Overcurrent Protection," whose primary objective is to specify common test standards necessary for the continued control of manufactured items intended for protection against fire, etc. Some common variations of these standards include: fully enclosed fuseholders, high contact resistances, air movement, transient spikes, and changes in connecting cablesize (diameter and length). Fuses are essentially temperature-sensitive devices. Even small variations from the controlled test conditions can greatly affect the predicted life of a fuse when it is loaded to its nominal value, usually expressed as 100% of rating.

The circuit design engineer should clearly understand that the purpose of these controlled test conditions is to enable fuse manufacturers to maintain unified performance standards for their products, and he must account for the variable conditions of his application. To compensate for these variables, the circuit design engineer who is designing for trouble-free, long-life fuse protection in his equipment generally loads his fuse not more than 75% of the nominal rating listed by the manufacturer,keeping in mind that overload and short circuit protection must be adequately provided for.

The fuses under discussion are temperature-sensitive devices whose ratings have been established in a 25ºC ambient. The fuse temperature generated by the current passing through the fuse increases or decreases with ambient temperature change.

The ambient temperature chart in the FUSE SELECTION CHECKLIST section illustrates the effect that ambient temperature has on the nominal current rating of a fuse. Most traditional Slo-Blo® Fuse designs use lower melting temperature materials and are, therefore, more sensitive to ambient temperature changes.

DIMENSIONS: Unless otherwise specified, dimensions are in inches.

The fuses in this catalog range in size from the approx. 0402 chip size (.041"L×.020"W×.012"H) up to the 5 AG, also commonly known as a"MIDGET" fuse (13/32" Dia.×11/2" Length). As new products were developed throughout the years, fuse sizes evolved to fill the various electrical circuit protection needs.

The first fuses were simple, open-wire devices, followed in the 1890's by Edison's enclosure of thin wire in a lamp base to make the first plug fuse. By 1904, Underwriters Laboratories had established size and rating specifications to meet safety standards. The renewable type fuses and automotive fuses appeared in 1914, and in 1927 Littelfuse started making very low amperage fuses for the budding electronics industry.

The fuse sizes in following chart began with the early "Automobile Glass" fuses, thus the term "AG". The numbers were applied chronologically as different manufacturers started making a new size: "3AG," for example, was the third size placed on the market. Other non-glass fuse sizes and constructions were determined by functional requirements, but they still retained the length or diameter dimensions of the glass fuses. Their

Fuse Characteristics, Terms and Consideration Factors (continued)

designation was modified to AB in place of AG, indicating that the outer tube was constructed from Bakelite, fibre, ceramic, or a similar material other than glass. The largest size fuse shown in the chart is the 5AG, or "MIDGET," a name adopted from its use by the electrical industry and the National Electrical Code range which normally recognizes fuses of 9/16"× 2" as the smallest standard fuse in use.

FUSE SIZES				
SIZE	DIAMETER (Inches)		LENGTH (Inches)	
1AG	1/4	.250	5/8	.625
2AG	–	.177	–	.588
3AG	1/4	.250	1¼	1.25
4AG	9/32	.281	1¼	1.25
5AG	13/32	.406	1½	1.50
7AG	1/4	.250	7⁄8	.875
8AG	1/4	.250	1	1

TOLERANCES: The dimensions shown in this catalog are nominal. Unless otherwise specified, tolerances are applied as follows. Tolerances do not apply to lead lengths:

± .010" for dimensions to 2 decimal places.

± .005" for dimensions to 3 decimal places.

Contact Littelfuse should you have questions regarding metric system and fractional tolerances.

FUSE CHARACTERISTICS: This characteristic of a fuse design refers to how rapidly it responds to various current overloads. Fuse characteristics can be classified into three general categories: very fast-acting, fast-acting, or Slo-Blo® Fuse. The distinguishing feature of Slo-Blo® fuses is that these fuses have additional thermal inertia designed to tolerate normal initial or start-up overload pulses.

FUSE CONSTRUCTION: Internal construction may vary depending on ampere rating. Fuse photos in this catalog show typical construction of a particular ampere rating within the fuse series.

FUSEHOLDERS: In many applications, fuses are installed in fuseholders. These fuses and their associated fuseholders are not intended for operation as a "switch" for turning power "on" and "off ".

INTERRUPTING RATING: Also known as breaking capacity or short circuit rating, the interrupting rating is the maximum approved current which the fuse can safely interrupt at rated voltage. During a fault or short circuit condition, a fuse may receive an instantaneous overload current many times greater than its normal operating current. Safe operation requires that the fuse remain intact (no explosion or body rupture) and clear the circuit.

Interrupting ratings may vary with fuse design and range from 35 amperes for some 250VAC metric size (5×20mm) fuses up to 200,000 amperes for the 600VAC KLK series. Information on other fuse series can be obtained from the Littelfuse.

Fuses listed in accordance with UL/CSA/ANCE 248 are required to have an interrupting rating of 10,000 amperes at 125V, with some exceptions (See STANDARDS section) which, in many applications, provides a safety factor far in excess of the short circuit currents available.

NUISANCE OPENING: Nuisance opening is most often caused by an incomplete analysis of the circuit under consideration.

Of all the "Selection Factors" listed in the FUSE SELECTION CHECKLIST, special attention must be given to items 1, 3, and 6, namely, normal operating current, ambient temperature, and pulses.

For example, one prevalent cause of nuisance opening in conventional power supplies is the failure to adequately consider the fuse's nominal melting I^2t rating. The fuse cannot be selected solely on the basis of normal operating current and ambient temperature. In this application, the fuse's nominal melting I^2t rating must also meet the inrush current requirements created by the input capacitor of the power supply's smoothing filter.

The procedure for converting various waveforms into I^2t circuit demand is given in the FUSE SELECTION CHECKLIST. For trouble-free, long-life fuse protection, it is good design practice to select a fuse such that the I^2t of the waveform is no more than 20% of the nominal melting I^2t rating of the fuse. Refer to the section on PULSES in the FUSE SELECTION CHECKLIST.

RESISTANCE: The resistance of a fuse is usually an insignificant part of the total circuit resistance. Since the resistance of fractional amperage fuses can be several ohms, this fact should be considered when using them in low-voltage circuits. Actual values can be obtained by contacting Littelfuse.

Most fuses are manufactured from materials which have positive temperature coefficients, and, therefore, it is common to refer to cold resistance and hot resistance (voltage drop at rated current), with actual operation being somewhere in between.

Cold resistance is the resistance obtained using a measuring current of no more than 10% of the fuse's nominal rated current. Values shown in this publication for cold resistance are nominal and representative. The factory should be consulted if this parameter is critical to the design analysis.

Hot resistance is the resistance calculated from the

Fuse Characteristics, Terms and Consideration Factors (continued)

stabilized voltage drop across the fuse, with current equal to the nominal rated current flowing through it. Resistance data on all Littelfuse products are available on request. Fuses can be supplied to specified controlled resistance tolerances at additional cost.

SOLDERING RECOMMENDATIONS: Since most fuse constructions incorporate soldered connections, caution should be used when installing those fuses intended to be soldered in place. The application of excessive heat can reflow the solder within the fuse and change its rating. Fuses are heat-sensitive components similar to semi-conductors, and the use of heat sinks during soldering is often recommended.

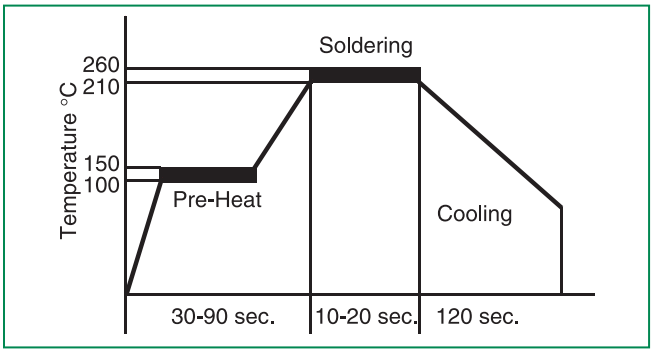

Lead-Free Soldering Parameters (most instances):
Wave Solder — 260ºC, 10 seconds max
Reflow Solder — 260ºC, 30 seconds max

TEST SAMPLING PLAN: Because compliance with certain specifications requires destructive testing, these tests are selected on a statistical basis for each lot manufactured.

TIME-CURRENT CURVE: The graphical presentation of the fusing characteristic, time-current curves are generally average curves which are presented as a design aid but are not generally considered part of the fuse specification. Time-current curves are extremely useful in defining a fuse, since fuses with the same current rating can be represented by considerably different time-current curves. The fuse specification typically will include a life requirement at 100% of rating and maximum opening times at overload points (usually 135% and 200% of rating depending on fuse standard characteristics). A time-current curve represents average data for the design; how ever, there may be some differences in the values for any one given production lot. Samples should be tested to verify performance, once the fuse has been selected.

UNDERWRITERS LABORATORIES: Reference to "Listed by Underwriters Laboratories" signifies that the fuses meet the requirements of UL/CSA/ANCE 248-14 "Fuses for Supplementary Overcurrent Protection". Some 32 volt fuses (automotive) in this catalog are listed under UL Standard 275. Reference to "Recognized under the Component Program of Underwriters Laboratories" signifies that the item is recognized under the component program of Underwriters Laboratories and application approval is required.

VOLTAGE RATING: The voltage rating, as marked on a fuse, indicates that the fuse can be relied upon to safely interrupt its rated short circuit current in a circuit where the voltage is equal to, or less than, its rated voltage.

This system of voltage rating is covered by N.E.C. regulations and is a requirement of Underwriters Laboratories as a protection against fire risk. The standard voltage ratings used by fuse manufacturers for most small-dimension and midget fuses are 32, 63, 125, 250 and 600.

In electronic equipment with relatively low output power supplies, with circuit impedance limiting short circuit currents to values of less than ten times the current rating of the fuse, it is common practice to specify fuses with 125 or 250 volt ratings for secondary circuit protection of 500 volts or higher.

As mentioned previously (See RERATING section), fuses are sensitive to changes in current, not voltage, maintaining their "status quo" at any voltage up to the maximum rating of the fuse. It is not until the fuse element melts and arcing occurs that the circuit voltage and available power become an issue. The safe interruption of the circuit, as it relates to circuit voltage and available power, is discussed in the section on INTERRUPTING RATING.

To summarize, a fuse may be used at any voltage that is less than its voltage rating without detriment to its fusing characteristics. Please contact the factory for applications at voltages greater than the voltage rating.

DERIVATION OF NOMINAL MELTING I^2t: Laboratory tests are conducted on each fuse design to determine the amount of energy required to melt the fusing element. This energy is described as nominal melting I^2t and is expressed as "Ampere Squared Seconds" (A^2 sec.).

A pulse of current is applied to the fuse, and a time measurement is taken for melting to occur. If melting does not occur within a short duration of about 8 milliseconds (0.008 seconds) or less, the level of pulse current is increased. This test procedure is repeated until melting of the fuse element is confined to within about 8 milliseconds.

The purpose of this procedure is to assure that the heat created has insufficient time to thermally conduct away from the fuse element. That is, all of the heat energy (I^2t) is used, to cause melting. Once the measurements of current (I) and time (t) are determined, it is a simple matter to calculate melting I^2t. When the melting phase reaches completion, an electrical arc occurs immediately prior to the "opening" of the fuse element.

$$\text{Clearing } I^2t = \text{Melting } I^2t + \text{arcing } I^2t$$

The nominal I^2t values given in this publication pertain to the melting phase portion of the "clearing" or "opening". Alternatively the time can be measured at 10 times of the rated current and the I^2t value is calculated like above.

Fuse Selection Checklist

The application guidelines and product data in this guide are intended to provide technical information that will help with application design. Since these are only a few of the contributing parameters, application testing is strongly recommended and should be used to verify performance in the circuit/application.

Many of the factors involved with fuse selection are listed below. For additional assistance with choosing fuses appropriate to you requirements, contact your Littelfuse products reprentative.

Selection Factors

1. **Normal operating current**
2. **Application voltage (AC or DC)**
3. **Ambient temperature**
4. **Overload current and length of time in which the fuse must open**
5. **Maximum available fault current**
6. **Pulses, Surge Currents, Inrush Currents, Start-up Currents, and Circuit Transients**
7. **Physical size limitations, such as length, diameter, or height**
8. **Agency Approvals required, such as UL, CSA, VDE, METI, MITI or Military**
9. **Fuse features (mounting type/form factor, ease of removal, axial leads, visual indication, etc.)**
10. **Fuseholder features, if applicable and associated rerating (clips, mounting block, panel mount, PC board mount, R.F.I. shielded, etc.)**
11. **Application testing and verification prior to production**

1. NORMAL OPERATING CURRENT: The current rating of a fuse is typically derated 25% for operation at 25ºC to avoid nuisance blowing. For example, a fuse with a current rating of 10A is not usually recommended for operation at more than 7.5A in a 25ºC ambient. For additional details, see RERATING in the previous section and AMBIENT TEMPERATURE below.

2. APPLICATION VOLTAGE: The voltage rating of the fuse must be equal to, or greater than, the available circuit voltage. For exceptions, see VOLTAGE RATING.

3. AMBIENT TEMPERATURE: The current carrying capacity tests of fuses are performed at 25ºC and will be affected by changes in ambient temperature. The higher the ambient temperature, the hotter the fuse will operate, and the shorter its life. Conversely, operating at a lower temperature will prolong fuse life. A fuse also runs hotter as the normal operating current approaches or exceeds the rating of the selected fuse. Practical experience indicates fuses at **room temperature** should last indefinitely, if operated at no more than 75% of catalog fuse rating.

Ambient temperature effects are in addition to the normal re-rating, see example. Example: Given a normal operating current of 1.5 amperes in an application using a traditional Slo-Blo® fuse at room temperature, then:

$$\text{Catalog Fuse Rating} = \frac{\text{Normal Operating Current}}{0.75}$$

- or -

$$\frac{1.5\ \text{Amperes}}{0.75} = 2.0\ \text{Amp Fuse (at 25ºC)}$$

Similarly, if that same fuse were operated at a very high ambient temperature of 70°C, additional derating would be necessary. Curve "A" (Traditional Slo-Blo® Fuse) of that ambient temperature chart shows the maximum operating "Percent of Rating" at 70°C to be 80%, in which case;

$$\text{Catalog Fuse Rating} = \frac{\text{Normal Operating Current}}{0.75 \times \text{Percent of Rating}}$$

- or -

$$\frac{1.5\ \text{Amperes}}{0.75 \times 0.80} = 2.5\ \text{Amp Fuse (at 70ºC)}$$

This charts shows typical ambient temperature effects on current carrying capacity of Littelfuse products. For specific re-rating information, please consult the product data sheet at www.littelfuse.com or contact a Littelfuse representative.

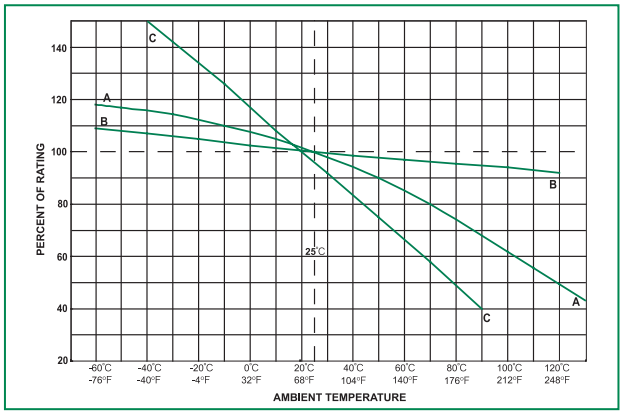

Curve A: Thin-Film Fuses and 313 Series (.010 to .150A)

Curve B: FLAT-PAK®, TeleLink®, Nano²®, PICO®, Blade Terminal and other leaded and catridge fuses

Curve C: Resettable PTC's

Fuse Selection Checklist (continued)

4. OVERLOAD CURRENT CONDITION: The current level for which protection is required. Fault conditions may be specified, either in terms of current or, in terms of both current and maximum time the fault can be tolerated before damage occurs. Time-current curves should be consulted to try to match the fuse characteristic to the circuit needs, while keeping in mind that the curves are based on average data.

5. MAXIMUM FAULT CURRENT: The Interrupting Rating of a fuse must meet or exceed the Maximum Fault Current of the circuit.

6. PULSES: The general term "pulses" is used in this context to describe the broad category of wave shapes referred to as "surge currents", "start-up currents", "inrush currents", and "transients". Electrical pulse conditions can vary considerably from one application to another. Different fuse constructions may not react the same to a given pulse condition. Electrical pulses produce thermal cycling and possible mechanical fatigue that could affect the life of the fuse. Initial or start-up pulses are normal for some applications and require the characteristic of a Slo-Blo® fuse. Slo-Blo® fuses incorporate a thermal delay design to enable them to survive normal start-up pulses and still provide protection against prolonged overloads. The start-up pulse should be defined and then compared to the time-current curve and I^2t rating for the fuse. Application testing is recommended to establish the ability of the fuse design to withstand the pulse conditions.

Nominal melting I^2t is a measure of the energy required to melt the fusing element and is expressed as "Ampere Squared Seconds" (A^2 Sec.). This nominal melting I^2t, and the energy it represents (within a time duration of 8 milliseconds [0.008 second] or less and 1 millisecond [0.001 second]or less for thin film fuses), is a value that is constant for each different fusing element. Because every fuse type and rating, as well as its corresponding part number, has a different fusing element, it is necessary to determine the I^2t for each. This I^2t value is a parameter of the fuse itself and is controlled by the element material and the configuration of the fuse element. In addition to selecting fuses on the basis of "Normal Operating Currents", "Rerating", and "Ambient Temperature" as discussed earlier, it is also necessary to apply the I^2t design approach. This nominal melting I^2t is not only a constant value for each fuse element design, but it is also independent of temperature and voltage. Most often, the nominal melting I^2t method of fuse selection is applied to those applications in which the fuse must sustain large current pulses of a short duration. These high-energy currents are common in many applications and are critical to the design analysis.

The following example should assist in providing a better understanding of the application of I^2t.

EXAMPLE: Select a 125V, very fast-acting PICO®II fuse that is capable of withstanding 100,000 pulses of current (I) of the pulse waveform shown in Figure 1.

The normal operating current is 0.75 ampere at an ambient temperature of 25ºC.

Step 1 — Refer to Chart 1 and select the appropriate pulsewaveform, which is waveform (E) in this example. Place the applicable value for peak pulse current (i_p) and time (t) into the corresponding formula for waveshape (E), and calculate the result, as shown:

$$I^2t = \frac{1}{5}\ (i_p)^2 t$$

$$= \frac{1}{5} \times 8^2 \times .004 = 0.0512\ A^2\ Sec.$$

This value is referred to as the "Pulse I^2t".

Step 2 — Determine the required value of Nominal Melting I^2t by referring to Chart 2. A figure of 22% is shown in Chart II for 100,000 occurrences of the Pulse I^2t calculated in Step 1. This Pulse I^2t is converted to its required value of Nominal Melting I^2t as follows:

Nom. Melt I^2t = Pulse I^2t/.22

0.0512/.22 = 0.2327 A^2 Sec.

Step 3 — Examine the I^2t rating data for the PICO® II, 125V, very fast-acting fuse. The part number 251001, 1 ampere design is rated at 0.256 A^2 Sec., which is the minimum fuse rating that will accommodate the 0.2327 A^2 Sec. value calculated in Step 2. This 1 ampere fuse will also accommodate the specified 0.75 ampere normal operating current, when a 25% derating factor is applied to the 1 ampere rating, as previously described.

7. PHYSICAL SIZE LIMITATIONS: Please refer to the product dimensions presented in current Littelfuse product data sheets for specific information.

8. AGENCY APPROVALS: For background information about common standards, please consult the STANDARDS section of this guide or visit our Design Support web site at www.littelfuse.com/design-support.html. For specific agency approval information for each Littelfuse product, please refer to the data sheets within this catalog and information presented on www.littelfuse.com. As agency approvals and standards may change, please rely on the information presented on www.littelfuse.com as current information.

9. FUSE FEATURES: Please consult the specific product features presented within this catalog and on our web site at www.littelfuse.com. For additional information and support contact your Littelfuse product representative.

Fuse Selection Checklist (continued)

FIGURE 1

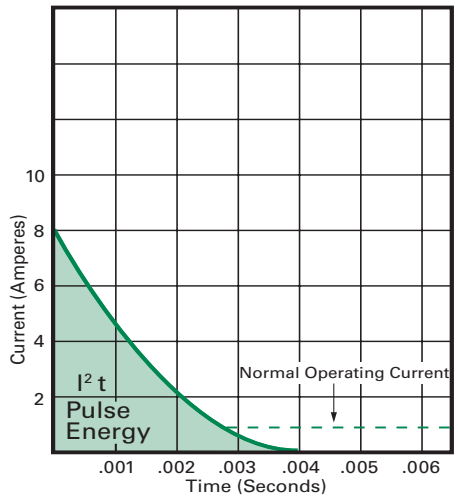

10. FUSEHOLDER FEATURES AND RERATING: For information about the range of Littelfuse fuseholders and specific features and characteristics, please consult with a Littelfuse products representative or visit our web site (www.littelfuse.com).

For 25°C ambient temperatures, it is recommended that fuseholders be operated at no more than 60% of the nominal current rating established using the controlled test conditions specified by Underwriters Laboratories. The primary objective of these UL test conditions is to specify common test standards necessary for the continued control of manufactured items intended for protection against fire, etc. A copper dummy fuse is inserted in the fuseholder by Underwriters Laboratories, and then the current is increased until a certain temperature rise occurs. The majority of the heat is produced by the contact resistance of the fuseholder clips. This value of current is considered to be the rated current of the fuseholder, expressed as 100% of rating. Some of the more common, everyday applications may differ from these UL test conditions as follows: fully enclosed fuseholders, high contact resistance,air movement, transient spikes, and changes in connecting cable size (diameter and length). Even small variations from the controlled test conditions can greatly affect the ratings of the fuse-holder. For this reason, it is recommended that fuseholders be derated by 40% (operated at no more than 60% of the nominal current rating established using the Underwriter Laboratories test conditions, as previously stated).

11. TESTING: The factors presented here should be considered in selecting a fuse for a given application. The next step is to verify the selection by requesting samples for testing in the actual circuit. Before evaluating the samples, make sure the fuse is properly mounted with good electrical connections, using adequately sized wires or traces. The testing should include life tests under normal conditions and overload tests Under fault conditions, to ensure that the fuse will operate properly in the circuit.

CHART 1

WAVESHAPES	FORMULAS
A 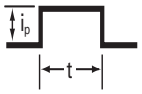	$i = k$ $I^2t = i_p^2\, t$
B 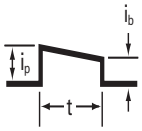	$i = i_p\text{-}kt$ $I^2t = (1/3)(i_p^2 + i_p i_b + i_b^2)\, t$
C 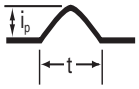	$i = i_p \sin t$ $I^2t = (1/2)\, i_p^2\, t$
D	$I^2t = (1/3)\, i_p^2\, t$
E 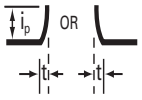	$i = kt^2$ OR $i = i_p(1\text{-}kt)^2$ $I^2t = (1/5)\, i_p^2\, t$
F	$i = i_p e^{-kt})$ $I^2t \cong (1/2)\, i_p^2\, t^1$

CHART 2

PULSE CYCLE WITHSTAND CAPABILITY	
100,000 Pulses	Pulse I^2t = 22% of Nominal Melting I^2t
10,000 Pulses	Pulse I^2t = 29% of Nominal Melting I^2t
1,000 Pulses	Pulse I^2t = 38% of Nominal Melting I^2t
100 Pulses	Pulse I^2t = 48% of Nominal Melting I^2t

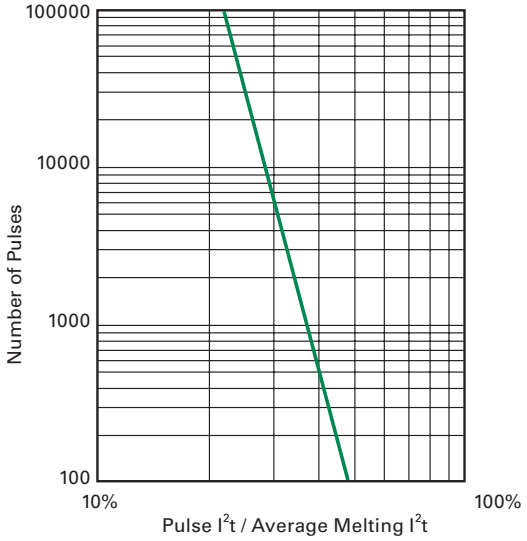

Note: Adequate time (10 seconds) must exist between pulse events to allow heat from the previous event to dissipate.

PTC Characteristics and Terms

Overcurrent circuit protection can be accomplished with the use of either a traditional fuse or PTC (positive temperature coefficient) device.

PTCs are typically used in a wide variety of telecom, computer, consumer electronics, battery and medical electronics product applications where overcurrent events are common and automatic resettability desired.

Littelfuse offers PTCs with the following general forms and features, and come in a variety of sizes and capacities:

Surface Mount Devices:

- A full range of compact footprints
- Low hold current
- Very fast trip time
- Low resistance

Radial Leaded Series:

- Protection devices up to 600Vdc
- A very high hold current
- Low trip-to-hold current ratio
- Low resistance.

Battery Strap Devices:

- A narrow low profile design
- A weldable band Nickel terminal
- Low resistance–for extended battery run time

If your application requirements fall outside of our product range, in certain instances we can offer customized solutions. Please contact Littelfuse for more information.

Littelfuse iDesign™ Online Fuse Design and Selection Tool

To view a short online tutorial on using the Littelfuse iDesign tool, visit: http://vimeo.com/90118164

Traditional Fuses Vs. PTCs

Fuses and PTCs are both overcurrent protection devices, though each offer their own unique operating characteristics and benefits. Understanding the differences between the two technologies should make the choice in selection easier, depending on the application.

The most obvious difference is that PTCs are automatically resettable whereas traditional Fuses need to be replaced after they they are tripped. Whereas a fuse will completely stop the flow of current (which may be desired in critical applications) after most similar overcurrent event, PTCs continue to enable the equiment to function, except in extreme cases.

Because they reset automatically, many circuit designers choose PTCs in instances where overcurrent events are expected to occur often, and where maintaining low warranty and service costs, constant system uptime, and/or user transparency are at a premium. They are also often chosen in circuits that are difficult to access or in remote locations, were fuse replacement would be difficult.

There are several other operating characteristics to be considered that distinguish PTCs and fuses, and it is also best to test and verify device performance before use within the end application.

Littelfuse PTC Characteristics

Both Polymeric (Positive Temperature Coefficient) PTC and traditional Fuse devices react to heat generated by the excessive current flow in a circuit. A fuse melts open, interrupting the current flow whereas a PTC limits current flow as it rises in temperature, changing from low to high resistance state. In both cases this condition is called "tripping." The graph at right shows the typical response of a PTC to temperature.

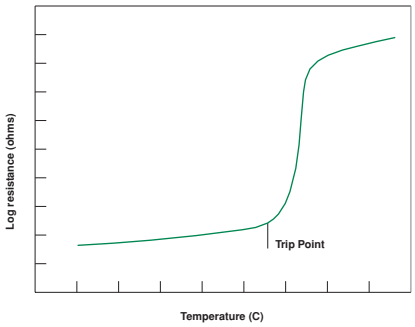

Littelfuse Polymer PTCs are made chiefly of high density polyethylene mixed with graphite. During an overcurrent event, a Polymer PTC will heat and expand, which in turn causes the conducting particles to break contact and stop the current.

The general procedure for resetting the device after an overload has occurred is to remove power and allow the device to cool down.

PTC Characteristics and Terms (continued)

Leakage Current: When a PTC is in a "tripped state" it protects the circuitry by limiting the current flow to a low leakage level. Leakage current can range from less than a hundred milliamps (mA) at rated voltage up to a few hundred milliamps (mA) at lower voltages. Fuses on the other hand completely interrupt the current flow when tripped, and this open circuit results in no leakage current when subjected to an overload current.

Interrupting Rating: PTCs are rated for a maximum short circuit current at rated voltage also known as "breaking capacity" or Imax. This fault current level is the maximum current that the device can withstand safely, keeping in mind that the PTC will not actually interrupt the current flow (see Leakage Current above). A typical Littelfuse PTC short circuit rating is 40A; or for the battery strap PTCs, this value can reach 100A. Fuses do in fact interrupt the current flow in response to the overload and the range of interrupting ratings, vary from tens of amperes (A) up to 10,000 (A) amperes at rated voltage.

Operating Voltage Rating: General use Littelfuse PTCs are not rated above 60V while fuses are rated up to 600V.

Hold Current Rating: The hold (operating) current rating for PTCs can be up to 14A, while the maximum level for fuses can exceed 30A.

Resistance: Reviewing product specifications indicates that similarly rated PTCs have about twice (sometimes more) the resistance of fuses.

Agency Approvals: Littelfuse PTCs are Recognized under the Component Program of Underwriters Laboratories to UL Standard 1434 for Thermistors. The devices have also been certified under the CSA Component Acceptance Program.

Time-Current Characteristic: Comparing the time-current curves of PTCs to time-current curves of fuses show that the speed of response for a PTC is similar to the time delay of a Littelfuse Slo-Blo® fuse.

Temperature Rerating: The useful upper limit for a PTC is generally 85ºC, while the maximum operating temperature for fuses is 125ºC.

Ambient temperature effects are in addition to the normal rerating. PTCs hold and trip rating must be rerated when applied at conditions other than room ambient. For example, any rise in ambient temperature will decrease the hold current rating as well as the trip current. A reduction in ambient temperature will increase the trip current as well as the hold current.

The temperature rerating curves in the table below compare PTCs to fuses and illustrate that more rerating is required for a PTC at a given temperature.

Temperature Rerating Curves Comparing PTCs to Fuses

Chart Key

Curve A
Thin-Film Fuses and 313 Series (.010 to .150A)

Curve B
FLAT-PAK®, Nano²®, PICO®, Blade Terminal, Special Purpose and other leaded and cartridge fuses (except 313.010 – .150A)

Curve C
Resettable PTCs

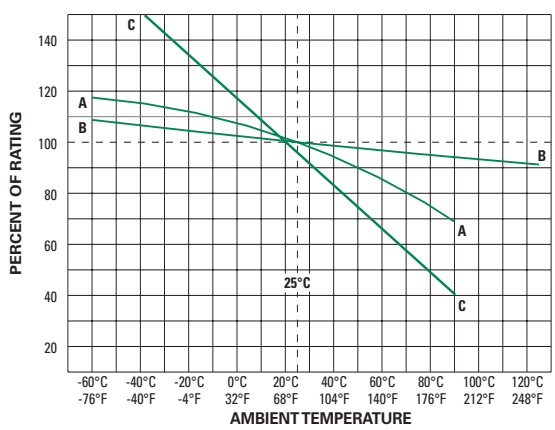

PTC Product Applications

PTCs are typically used as circuit protection in applications where sensitive components are at constant risk of damage from overcurrent conditions. The ability of PTCs to reset themselves after exposure to a fault current makes them ideal within circuits that are not easily accessible to a user or technician or where constant uptime is required.

Typical applications include port protection on personal computers (USB, Firewire, keyboard/mouse, and serial ports), peripherals (hard drives, video cards, and hubs), cell phone, battery packs, industrial controls, lighting ballast and motor controls.

The chart below is meant as a quick guide in narrowing to a Littelfuse PTC device that may be appropriate to certain end applications.

For detailed application assistance please contact a Littelfuse product specialist or visit our new reference design center at www.littelfuse.com/designcenter.

For detailed product specifications, please consult the Littelfuse PTC datasheets within this catalog or visit www.littelfuse.com/PTCs.

		SURFACE MOUNT									RADIAL LEADED							BATTERY STRAP					
	Series Name	LoRho	0603L	0805L	1206L	1210L	1812L	2016L	2920L	250S	USBR	16R	30R	60R	72R	250R	600R	LR	LR	LT	ST	VL	VT
Telecom	**Application**																						
	UI60950 ,TIA-968-A, GR-1089 Req's									X						X	X						
	ITU-T Recoomendations									X						X	X						
	CPE (Customer Premises Equipment)									X						X	X						
	Analog Line Card									X						X	X						
	T1/E1/J1 And HDSL									X						X	X						
	ISDN									X						X	X						
	ADSL									X						X	X						
	Cable Telephony									X						X	X						
	PBX/KTS And Key Telephone System									X						X	X						
Computer	CPU								X		X	X											
	USB	X	X	X	X	X	X				X	X											
	IEEE1284 Parallel Data Bus				X	X	X				X	X											
	IEEE 802.3							X	X					X	X								
	IEEE 1394						X		X				X										
	I/O Ports	X			X	X	X		X		X	X											
	PC Card	X	X	X	X	X	X		X		X	X											
	SCSI				X	X	X		X		X	X											
	Video Port				X	X	X		X		X	X											
	LCD Monitor	X	X	X	X	X	X				X	X											
Consumer Electronics	Set Top Box				X	X	X		X														
	Loudspeaker												X										
	Smart Card Reader				X																		
	Mobile Phone	X	X	X	X	X																	
	Linear AC/DC Adapter	X	X	X	X	X	X		X				X	X	X								
	Portable Electronic Input Port	X	X	X	X	X	X	X															
	Electromagnetic Loads, Motor							X	X				X	X	X								
	Solenoid Protection						X		X				X	X	X								
Battery	Lithium Cell																	X	X	X	X	X	X
	Battery Pack																	X	X	X	X	X	X
Medical electronic	Voltage / Current Input Terminal				X		X																

NOTE: The application summary is for reference only. Determination of suitability for a specific application is the responsibility of the customer.

Littelfuse Electronics eCatalogs includes the latest standards, products, diagrams and videos in a new interactive format. View the eBook on your mobile device, tablet or desktop for easy access to Littelfuse products, technologies and technical resources. Quickly order free product samples, request more information and download datasheets all within the new user-friendly design.

Typical PTC Circuit Protection Designs

The following are examples of typical circuits using Littelfuse PTCs in combination with other Littelfuse circuit protection devices to provide a comprehensive protection solution. Contact a Littelfuse application expert for design assistance or visit www.littelfuse.com/designcenter or www.littelfuse.com/PTCs for additional information. Be sure to to veryify specifications and test device performance before use in the end application.

POWER OVER ETHERNET

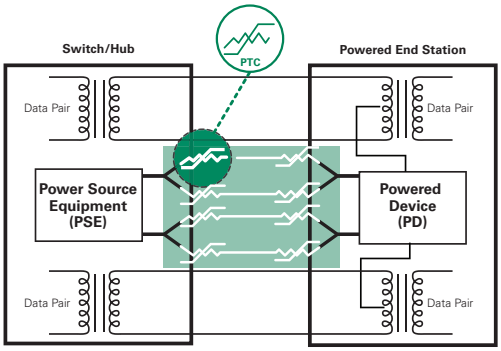

LI-ION BATTERY PACK

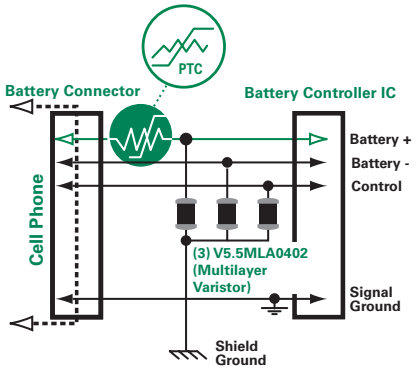

USB 1.1

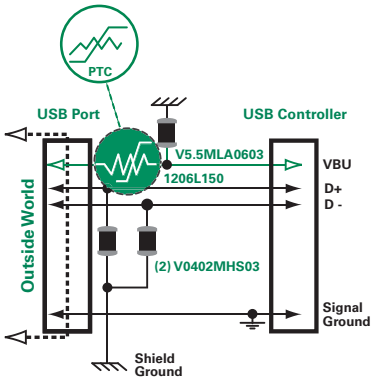

USB 2.0

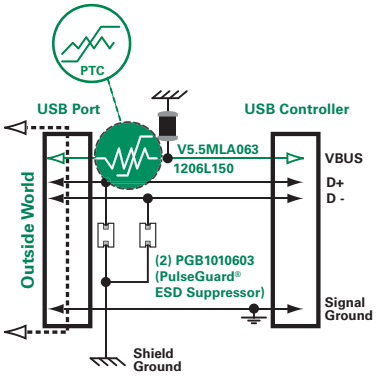

IEEE 1394 - FIREWIRE

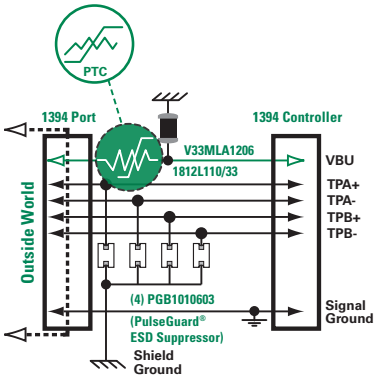

TIP/RING CIRCUIT - METALLIC

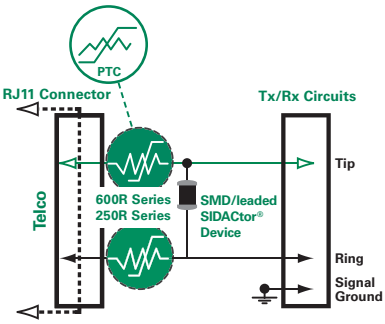

Standards

Littelfuse is at your service to help solve your electrical protection problems. When contacting Littelfuse sales engineers, please have all the requirements of your applications available. Requests for quotes or assistance in designing or selecting special types of circuit protection components for your particular applications are also welcome. In the absence of special requirements, Littelfuse reserves the right to make appropriate changes in design, process, and manufacturing location without prior notice.

Fuse ratings and other performance criteria are evaluated under laboratory conditions and accptance criteria, as defined in one or more of the various fuse standards. It is important to understand these standards so that the fuse can be properly applied to circuit protection applications.

UL/CSA/ANCE (Mexico) 248-14 FUSES FOR SUPPLEMENTARY OVERCURRENT PROTECTION (600 Volts, Maximum) (Previously UL 198G and CSA C22.2, No. 59)

UL LISTED

A UL Listed fuse meets all the requirements of the UL/CSA/ANCE 248-14 Standard. Following are some of the requirements. UL ampere rating tests are conducted at 100%, 135%, and 200% of rated current. The fuse must carry 100% of its ampere rating and must stabilize at a temperature that does not exceed a 75°C rise.

The fuse must open at 135% of rated current within one hour. It also must open at 200% of rated current within 2 minutes for 0-30 ampere ratings and 4 minutes for 35-60 ampere ratings.

The interrupting rating of a UL Listed fuse is 10,000 amperes AC minimum at 125 volts. Fuses rated at 250 volts may be listed as interrupting 10,000 amperes at 125 volts and, at least, the minimum values shown below at 250 volts.

Ampere Rating of Fuse	Interrupting Rating In Amperes	Voltage Rating
0 to 1	35	250 VAC
1.1 to 3.5	100	250 VAC
3.6 to 10	200	250 VAC
0.1 to 15	750	250 VAC
15.1 to 30	1500	250 VAC

Recognized Under the Component Program of Underwriters Laboratories

The Recognized Components Program of UL is different from UL Listing. UL will test a fuse to a specification requested by the manufacturer. The test points can be different from the UL Listed requirements if the fuse has been designed for a specific application. Application approval is required by UL for fuses recognized under the Component Program.

UL 275 AUTOMOTIVE GLASS TUBE FUSES (32 Volts)

UL LISTED

UL ampere ratings tests are conducted at 110%, 135%, and 200%. Interrupting rating tests are not required.

CSA Certification

CSA Certification in Canada is equivalent to UL Listing in the United States.

The Component Acceptance Program of CSA is equivalent to the Recognition Program at UL.

METI (Japan Ministry of Economy, Trade and Industry)

METI APPROVAL

METIⒶ approval in Japan is similar to UL Recognition in the United States.

METIⒷ has its own design standard and characteristics.

INTERNATIONAL ELECTROTECHNICAL COMMISSION (IEC)

Publication 60127, Parts 1, 2, 3, 4, 6

The IEC organization is different from UL and CSA, since IEC only writes specifications and does not certify. UL and CSA write the specifications, and are responsible for testing and certification.

Certification to IEC specifications are given by such organizations as SEMKO (Swedish Institute of Testing and Approvals of Electrical Equipment), BSI (British Standards Institute) and VDE (German Standard Insitute), as well as UL and CSA.

IEC Publication 60127 defines three breaking capacity levels (interrupting rating). Low breaking capacity fuses must pass a test of 35 amperes or ten times rated current, whichever is greater, while enhanced breaking capacity fuses must pass a test of 150 amperes and high breaking capacity fuses must pass a test of 1500 amperes.

60127 Part 2

Sheet 1 — Type F Quick Acting, High Breaking Capacity
Sheet 2 — Type F Quick Acting, Low Breaking Capacity
Sheet 3 — Type T Time Lag, Low Breaking Capacity
Sheet 4 — Style Fuses 1/4×1 1/4
Sheet 5 — Type T Time Lag, High Breaking Capacity
Sheet 6 — Type T Time Lag, Enhanced Breaking Capacity

The letters 'F' and 'T' represent the time-current characteristic of the fast-acting and time delay fuses. One of these letters will be marked on the end cap of the fuse.

Standards (continued)

UL/CSA/ANCE (Mexico) 248-14 vs. IEC 60127 Part 2 FUSE OPENING TIMES vs. METI/MITI®

Percent of Rating	UL & CSA STD 248-14	IEC TYPE F Sheet 1 (*)	IEC TYPE F Sheet 2 (*)	IEC TYPE T Sheet 3 (*)	IEC TYPE T Sheet 5 (*)	METI/MITI ®
100	4Hr.Min.	—	—	—	—	
130	—	—	—	—	—	1Hr.Min.
135	60 Minutes Max.	—	—	—	—	
150	—	60 Minutes Min.	60 Minutes Min.	60 Minutes Min.	60 Minutes Min.	
160	—	—	—	—	—	1Hr.Max.
200	2 Minutes Max.	—	—	—	—	2 Minutes Max.
210	—	30 Minutes Max.	30 Minutes Max.	2 Minutes Max.	30 Minutes Max.	

(*) Note: The IEC Specification is written up to 10.0A. Any components above these ratings are not recognized by the IEC (although the fuses may have similar opening characteristics).

IEC also has opening time requirements at 275%, 400% and 1000%; however, the chart is used to show that fuses with the same ampere rating made to different specifications are not interchangeable. According to the IEC 60127 Standard, a one ampere-rated fuse can be operated at one ampere. A one ampere-rated fuse made to UL/CSA/ANCE 248-14 should not be operated at more than .75 ampere (25% derated — See RERATING section).

METI® does not differentiate between fast acting and time delay characteristics.

Publication IEC 60127-4 (Universal Modular Fuse-Links [UMF])

This part of IEC 60127-4 covers both PCB through-hole and surface mount fuses. This standard covers fuses rated 32, 63, 125, and 250 volts. This standard will be accepted by UL/CSA making it the first global fuse standard. This specification uses different fusing gates than IEC 60127-2; the gates used here are 125%, 200%, and 1000%.

The fuses must not open in less than one hour at 125% of rated current and open within two minutes at 200% of rated current. The 1000% overload is used to determine the fuse characteristic. The opening time for each rating is listed below.

Type FF : Less than 0.001 sec.

Type F : From 0.001 - 0.01 sec.

Type T : From 0.01 - 0.1 sec.

Type TT : From 0.1 - 1.00 sec.

These characteristics correlate to the terminology used in IEC 60127-1.

Breaking capacity (interrupting rating) varies based on voltage rating. Parts rated at 32 & 63 volts must pass a test of 35 amperes or ten times rated current, whichever is greater. Parts rated at 125 volts must pass a test of 50 amperes or ten times rated current, whichever is greater. Parts rated at 250 volts are further defined as either low, intermediate or high breaking. The low breaking capacity fuses must pass a test of 100 amperes rated current, while intermediate breaking capacity fuses must pass a test of 500 amperes and high breaking capacity fuses must pass a test of 1500 amperes.

MILITARY/FEDERAL STANDARDS

MIL-PRF-15160 and MIL-PRF-23419

These specifications govern the construction and performance of fuses suitable primarily for military electronic applications.

MIL-PRF-19207

This specification governs the construction and performance of fuseholders suitable for military applications.

DSSC Drawing #87108

This drawing governs the construction and performance of .177″ × .570″ (2AG size) cartridge fuses and axial lead versions suitable for military applications. DSSC #87108 designation is included in the fuse end cap marking.

A robust web-based tool to help circuit designers identify the optimal electronic fuses for their products.

To use the Littelfuse iDesign tool, simply register to create a free online account at the iDesign Login.

Standards (continued)

MILITARY/FEDERAL STANDARDS

FEDERAL SPECIFICATION W-F-1814

This specification governs the construction and performance of fuses with high interrupting ratings that are approved for federal applications. Fuses approved to these specifications are on the Federal Qualified Products List.

Write to the following agencies for additional information on standards, approvals, or copies of the specifications.

Underwriters Laboratories Inc. (UL)
333 Pfingsten Road
Northbrook, Illinois, USA 60062-2096

Canadian Standards Association (CSA)
5060 Spectrum Way, Suite 100
Mississauga, Ontario, Canada L4W 5N6

International Electrotechnical Commission (IEC)
3, Rue de Varembe
1211 Geneva 20, Switzerland

Naval Publications and Military StandardsForm Center (for Military and Federal Standards)
5801 Tabor Avenue
Philadelphia, Pennsylvania, USA 19120

Defense Supply Center Columbus (DSCC)
3990 East Broad Street
Columbus, Ohio, USA 43218-3990

Ministry of Economy Trade and Industry (METI)
1-3-1 Kasumigaseki
Chiyouda-ku, Tokyo 100-8901, Japan

PTC Selection Worksheet

1. **Define the circuit operating parameters.**

   Normal operating current in amperes: .....
   Normal operating voltage in volts: .....
   Maximum interrupt current: .....
   Ambient temperature: .....
   Typical overload current: .....
   Required opening time at specified overload: .....
   Transient pulses expected: .....
   Agency approvals: .....
   Mounting type/form factor: .....
   Typical resistance (in circuit): .....

2. **Select the proper circuit protection component.**

   (*Refer to Table on Page 3 and specifications with Data Sheets*)

3. **Determine the opening time at fault.**

   Consult the Time-Current (T-C) Curve of each PTC series to determine if the selected part will operate within the constraints of your application.

   If the device opens too soon, the application may experience nuisance operation. If the device does not open soon enough, the overcurrent may damage downstream components.

   To determine the opening time for the chosen device, locate the overload current on the X-axis of the appropriate T-C Curve and follow its line up to its intersection with the curve. At this point read the time tested on the Y-axis. This is the average opening time for that device.

   If your overload current falls to the right of the curve the device will open. If the overload current is to the left of the curve, the device will not operate.

4. **Verify ambient operating parameters.**

   Ensure that the application voltage is less than or equal to the device's rated voltage and that the operating temperature limits are within those specified by the device.

5. **Verify the device's dimensions.**

   Compare the maximum dimensions of the device to the space available in the application. The dimension of each product is included within each data sheets on the following pages.

6. **Test the selected product in an actual application.**

A robust web-based tool to help circuit designers identify the optimal electronic fuses for their products.

Littelfuse iDesign™ Online Fuse Design and Selection Tool

Fuse and PTC Products Selection Guide

FUSE PRODUCTS

Fuses provide protection by completely stopping the flow of energy to sensitive circuits. If current exceeds the fuse's operating range, the metal wire or strip melts safely within an enclosure. Littelfuse offers the most extensive range of fuses available, and for easy replacement of cartridge fuses Littelfuse offers a wide selection of fuseholders including panel mount, in-line, and surface and thru-hole circuit board mount devices.

Surface Mount:

		Series Name[1]	View Datasheet	Order Samples	Size[2]	Time Lag	Fast Acting	Very Fast Acting	Device Range[3] (Operating Current Options in Amps)	Max. Voltage Rating[3] (Volts)	Interrupting Rating at Max. Voltage Rating[3] (Amps)	Operating Temperature Range	Agency Approvals[3] UL	UR	CSA	PSE	UMF	Halogen Free	RoHS Compliant	Lead Free
Ceramic Chip		437	•	•	1206		•		0.25 - 8	125 / 63 / 32	50	-55°C to +150°C		•				•	•	•
		438	•	•	0603		•		0.25 - 6	32 / 24	50			•				•	•	•
		440	•	•	1206		•		1.75 - 8	32	50			•	•			•	•	•
		441	•	•	0603		•		2 - 6	32	50			•	•			•	•	•
		469	•	•	1206	•			1 - 8	24 / 32	24 - 63			•	•			•	•	•
		501	•	•	1206		•		10, 12, 15, 20	32	150			•				•	•	•
Thin Film		466	•	•	1206			•	0.125 - 5	125 / 63 / 32	50	-55°C to +90°C		•	•			•	•	
		429	•	•	1206			•	7	24	35			•	•				•	•
		468	•	•	1206	•			0.5 - 3	63 / 32	35 - 50			•	•			•	•	•
		467	•	•	0603			•	0.25 - 5	32	35 - 50			•	•			•	•	•
		494	•	•	0603	•			0.25 - 5	32	35 - 50			•	•			•	•	•
		435	•	•	0402			•	0.25 - 5	32	35			•	•			•	•	•
Nano[2®] Fuse		448	•	•	2410			•	0.062 - 15	125 / 65	35 - 50	-55°C to +125°C		•	•	•			•	•
		449	•	•	2410	•			0.375 - 5	125	50			•	•	•			•	•
		451 / 453	•		2410			•	0.062 - 15	125 / 65	35 - 50		•	•	•	•		•	•	
		452 / 454	•		2410	•			0.375 - 12	125 / 72	50			•	•	•		•	•	
		456	•	•	4012	•			20, 25, 30, 40	125	100			•				•	•	
		458	•	•	1206		•		1.0 - 10	75 / 63	50			•				•	•	
		443	•	•	4012	•			0.5 - 5	250	50			•				•	•	
		464	•	•	4818		•		0.5 - 6.3	250	100					•	•	•	•	
		465	•	•	4818	•			1 - 6.3	250	100					•	•	•	•	
		462	•	•	4118	•			0.500 - 5	350	100	-40°C to +80°C		•			•		•	
		485	•	•	4818		•		0.500 - 3.15	600	100	-55°C to +125°C		•				•	•	
Telelink® Fuse		461	•	•	4012				0.5 - 2.0	600	60	-55°C to +125°C		•	•			•	•	
		461E			4012				1.25	600	60			•				•	•	
OMNI-BLOK® Fuseholder		154	•	•	*			•	0.062 - 10.0	125	35 - 50	-55°C to +125°C		•				•	•	
		154T			*	•			0.375 - 5	125	50			•				•	•	
Fuse and Clip Assemblies		157			*			•	0.062 - 10	125	35 - 50	-55°C to +125°C		•				•	•	
		157T			*	•			0.375 - 5	125	50			•				•	•	
		159	•	•	*				0.5 - 2	600	60			•				•	•	
		160			*	•			0.5 - 5	250	50			•				•	•	
PICO® SMF Fuse		459	•	•	*			•	0.062 - 5	125	50 - 300	-55°C to +125°C		•	•					
		460	•	•	*	•			0.5 - 5	125	50			•	•					
Flat Pak		202	•	•	*		•		0.062 - 5	250	50	-55°C to +125°C		•	•					
		203	•	•	*	•			0.25 - 5	250	50			•	•					
EBF		446	•	•	*		•		2.0 - 10.0	350	100	-40°C to +125°C		•	•					
		447	•	•	*		•		2.0 - 10.0	350	100			•	•					

(1) Detailed information about most product series listed here can be found on our web site.
(2) Size for these surface mount items refers to common industry length and width dimensions of the device surface area. Example: 0402 = .04" x .02"
(3) In some cases for these categories the ratings, agency approvals and specifications vary by part number and are presented here as ranges representing the whole series. Please refer to product data on www.littelfuse.com and in our data sheets for detailed information by part number.
* Please refer to data sheet for detailed specifications.

TABLE CONTINUES ON NEXT PAGE

Radial Leaded / Socket:

	Series Name[1]	View Datasheet	Order Samples	Time Lag	Medium Acting	Fast Acting	Very Fast Acting	Device Range[3] (Operating Current Options in Amps)	Max. Voltage Rating[3] (Volts)	Interrupting Rating at Max Voltage Rating[3] (Amps)	Operating Temperature Range	Agency Approvals[3] Americas UL	UR	CSA	QPL	UMF	Europe CE	VDE	TUV	BSI	Semko	Asia PSE	K	CCC	CQC	RoHS Compliant	Lead Free
Micro™ Fuse / TR3 Fuse	262/268	•	••				•	0.002 - 5	125	10,000	-55°C to +125°C		•	•			•										
	269		•				•	0.002 - 5	125	10,000	-55°C to +125°C		•	•	•		•										
	272/278	•	••				•	0.002 - 5	125	10,000	-55°C to +125°C		•	•			•										
	273/279	•	••				•	0.002 - 5	125	10,000	-55°C to +85°C		•	•			•										
	274		•				•	0.002 - 5	125	10,000	-55°C to +85°C				•		•										
	303	•	•			•		0.5 - 5	125	50	-55°C to +70°C	•		•			•									•	•
TR5® Fuse	370	•	•			•		0.4 - 6.3	250	35 - 50	-40°C to +85°C		•				•	•			•	•		•		•	•
	372	•	•	•				0.4 - 6.3	250	35 - 50			•				•	•			•	•	•	•	•	•	•
	373	•	•			•		0.5 - 10	250	50		•		•			•									•	•
	374	•	•	•				0.5 - 10	250	50		•		•			•									•	•
	382	•	•	•				1 - 10	250	100			•				•	•			•	•	•	•	•	•	•
	383	•	•	•				1 - 10	300	50 - 100			•				•	•				•				•	•
TE5	369	•	•	•				1 - 6.3	300	50	-40°C to +85°C		•				•					•				•	•
	385	•	•	•				0.35 - 1.5	125	50			•				•									•	•
	391	•	•			•		0.125 - 4	65	50			•				•									•	•
	392	•	•	•				0.8 - 6.3	250	25 - 63			•				•	•			•	•	•		•	•	•
	395	•	•			•		0.05 - 6.3	125	100		•					•					•				•	
	396	•	•	•				0.05 - 6.3	125	100		•					•					•				•	•
	397	•	•	•				0.35 - 1.5	125	50		•					•									•	•
	398	•	•		•			0.125 - 4	65	50			•				•									•	•
	399	•	•	•				0.125 - 4	65	50			•				•									•	•
	400	•	•	•				0.5 - 6.3	250	130			•				•	•				•				•	•
	804	•	•	•				0.8 - 6.3	250	150	-40°C to +125°C					•	•	•				•	•		•	•	•
	808	•	•			•		2 - 5	250	100	-40°C to +85°C		•				•									•	•
TE7	807	•	•	•				0.8 - 6.3	300	100	-40°C to +125°C	•	•	•			•					•	•			•	•

Axial Leaded / Cartridge:

	Series Name[1]	View Datasheet	Order Samples	Time Lag	Medium Acting	Fast Acting	Very Fast Acting	Device Range[3] (Operating Current Options in Amps)	Max. Voltage Rating[3] (Volts)	Interrupting Rating at Max Voltage Rating[3] (Amps)	Operating Temperature Range	Agency Approvals[3] Americas UL	UR	CSA	QPL	UMF	Europe CE	VDE	TUV	BSI	Semko	Asia PSE	K	CCC	CQC	RoHS Compliant	Lead Free
PICO® Fuse / PICO® II Fuse Axial	251	•	•				•	0.062 - 15	125	300DC / 50AC	-55°C to +125°C		•	•			•		•			•				•	
	253	•	•				•	0.062 - 15	125	300DC / 50AC					•		•		•			•				•	
	275	•	•				•	20 - 30	32	300DC / 50AC			•	•												•	
	263	•	•				•	0.062 - 5	250	50			•	•			•					•				•	
	471	•	•	•				0.5 - 5	125	50			•	•			•					•				•	
	472	•	•	•				0.5 - 5	125	50			•				•									•	
	473	•	•	•				0.375 - 7	125	50			•	•			•					•				•	
	265/266/267	•	•••				•	0.062 - 15	125	300DC / 50AC			•	•	•		•									•	
3.6x10 mm	874	•	•				•	0.1 - 10	250	50	-55°C to +125°C	•					•									•	•
	875	•	•	•				0.1 - 10	250	50		•					•									•	•
	876	•	•				•	0.125 - 5	250	35 - 50			•				•	•								•	•
	877	•	•	•				2 - 6.3	250	35 - 63			•				•	•								•	•
4.5x14.5 mm (2AG)	208	•	•			•		0.125 - 10	350	100	-55°C to +125°C		•		•		•					•				•	•
	209	•	•	•				0.25 - 7	350	100			•		•		•					•				•	•
	220	•	•	Special Fuse				0.3 - 7	250 / 300 / 350	35 - 100		•	•	•			•					•				•	•
	2205	•	•	•				0.25 - 2.5	250	35			•	•			•									•	•
	224/225	•	••			•		0.375 - 10	250 / 125	35 - 500		•	•	•			•					•				•	•
	229/230	•	••	•				0.25 - 7	250 / 125	35 - 400		•	•	•			•					•				•	•
5x20 mm	217	•	•			•		0.032 - 15	250	35 - 150	-55°C to +125°C		•	•			•	•		•	•	•	•	•		•	•
	218	•	•	•				0.032 - 16	250	35 - 100			•	•			•	•		•	•	•	•	•		•	•
	213	•	•	•				0.2 - 6.3	250	35 - 63			•	•			•	•		•	•	•		•		•	•
	219XA	•	•	•				0.04 - 6.3	250	150			•	•			•	•		•	•	•		•		•	•
	216	•	•			•		0.05 - 16	250	750 - 1500			•	•			•	•		•	•	•	•	•		•	•
	215	•	•	•				0.125 - 20	250	400 / 1500			•	•			•	•		•	•	•	•	•		•	•
	232	•	•		•			1 - 10	250 / 125	300 / 10,000							•					•	•			•	•
	235	•	•			•		0.1 - 7	250 / 125	35 - 10,000		•		•			•					•	•			•	•
	233	•	•		•			1 - 10	125	10,000		•		•			•					•	•			•	•
	234	•	•		•			1 - 10	250	100 - 200		•		•			•					•	•			•	•
	239	•	•	•				0.08 - 7	250 / 125	35 - 10,000		•		•			•					•	•			•	•
	285	•	•	•				0.125 - 20	250	400 - 1500							•					•				•	•
	477	•	•	•				0.5 - 16	400DC / 500AC	100 - 1500			•	•			•				•	•				•	•
	977	•	•	•				0.5 - 16	450DC / 500AC	200 / 100							•				•	•				•	•
6.3x32 mm (3AG/3AB)	312/318	•	••			•		0.062 - 35	250 / 32	35 - 300	-55°C to +125°C	•	•	•			•					•	•			•	•
	313/315	•	••	•				0.01 - 30	250 / 125 / 32	35 - 300		•	•	•			•					•	•			•	•
	314/324	•	••			•		0.375 - 40	250	35 - 1000		•	•	•			•					•	•			•	•
	322	•	•				•	12 - 30	65	200 - 1000			•				•					•				•	
	332	•	•				•	1- 10	250	100 / 200			•	•			•					•				•	•
	325/326	•	••	•				0.01 - 30	250	100 - 600		•	•	•			•					•	•			•	•
	505	•	•			•		10 - 30	450 / 500	20,000 - 50,000			•	•			•									•	•
	506	•	•			•		15 - 20	600DC	10,000			•	•			•									•	•
	508	•	•	1000VAC / DC High Voltage Fuse				0.315 - 1	1000	10,000			•	•			•									•	•

Fuse and PTC Products Selection Guide (continued)

PTC PRODUCTS

PTCs (positive temperature coefficient) increase resistance as temperature increases. They are designed to prevent unsafe levels of current while allowing constant safe current levels, and their resistance will "reset" automatically when the current and temperature returns to a safe level. PTCs are typically used in applications where automatic reset is desired.

Series Name[1]		View Datasheet	Order Samples	Size[2]	Hold Current (I_{HOLD})	Max Voltage (V_{MAX})	Max Fault current (I_{MAX})	Operating Temperature Range	Agency Approvals			Halogen Free	RoHS	Lead Free
									cUR	UR	TUV			
Surface Mount:														
LoRho PTC (Low Resistance)		•	•	0402	0.1 - 0.5A	6 / 12 V	50 A	-40°C to 85°C	•	•	•	•	•	•
				0603	0.5 - 2.0A									
				0805	0.75 - 3.0A									
				1206	0.75 - 4.5A									
				1812	1.9 - 3.7A									
				2920	7.0A									
0603L		•	•	0603 (1608)	0.04 - 0.5A	6 - 15 V	40 A		•	•	•	•	•	•
0805L		•	•	0805 (2012)	0.10 - 1.10 A	6 - 15 V	100 / 40 A		•	•	•	•	•	•
1206L		•	•	1206 (3216)	0.10 - 2.0A	6 - 30 V	100 A		•	•	•	•	•	•
1210L		•	•	1210 (3225)	0.05 - 2.0A	6 - 30 V	10 / 100 A		•	•	•	•	•	•
1812L		•	•	1812 (4532)	0.1 - 3.0A	6 - 60 V	10 / 20 / 100 A		•	•	•	•	•	•
2016L		•	•	2016 (5041)	0.30 - 2.00 A	6 - 60 V	20 / 40 A		•	•	•	•	•	•
2920L		•	•	2920 (7351)	0.30 - 3.00 A	6 - 60 V	10 / 40 A		•	•	•	•	•	•
250S		•	•	see data sheet	0.13 A	60 V	3 A				•	•	•	•
Radial Leaded:														
USBR		•	•	see data sheet	0.75 - 2.50 A	6 / 16 V	40 A	-40°C to 85°C	•	•	•		•	•
16R		•	•		2.50 - 14.00 A	16 V	100 A		•	•	•		•	•
30R		•	•		0.90 - 9.00 A	30 V	40 A		•	•	•		•	•
60R		•	•		0.10 - 3.75 A	60 V	40 A		•	•	•		•	•
72R		•	•		0.20 - 3.75 A	72 V	40 A		•	•	•		•	•
250R		•	•		0.08 - 0.18 A	250 V	3 / 10 A		•	•	•		•	•
600R		•	•		0.15 - 0.16 A	600 V	3 A		•	•	•		•	•
Battery Strap:														
SL (Low Resistance)		•	•	see data sheet	1.9 - 3.7 A	6 V	50 A	-40°C to 85°C	•	•	•	•	•	•

(1) Detailed information about most product series listed here can be found on our web site.
(2) Size for these surface mount items refers to common industry length and width dimensions of the device surface area. Example: 0402 = .04" x .02"

Packaging and Part Numbering

Littelfuse Fuse Products Traditional Part Numbering System

0 X X X X X X X X X X X X X X X

Product Series Code
Example:
437 series fuse is "0437"

Ampere Rating Code
Decimal is to far right for whole number amp ratings, to far left for ratings less than one, and within center for fractional amp ratings.

Examples:
10A fuse is "010."
1/4A or 0.25A fuse is ".250"
1 1/2A or 1.5A fuse is "01.5"
1 1/4A or 1.25A fuse is "1.25"

Refer to the Electrical Characteristics tables presented in each product data sheet for specific amp rating codes

Packaging Quantity Code *

A/X	1	**H**	100	**D**	1500	**N**	5000
V	5	**F**	200	**P**	2000	**K**	10000
T	10	**G**	250	**E**	2500	**J**	12000
S	20	**U**	500	**W**	3000	**Z**	Misc.
L	50	**M**	1000	**Y**	4000		

Packaging Type *
A Ammo packed
B Bubble packed
C Chip packed
R Reeled
X Filler

Options Codes *
RT1 Reel and Tape, 2.062in (52.4mm) lead spacing
RT2 Reel and Tape, 2.50 in (63.5mm) lead spacing
RT3 Reel and Tape, 2.874 in (73mm) lead spacing
E Pigtail lead type fuse
ID Indicating fuse
L RoHS compliant
P Lead-free

* Not all options and codes listed here are available for all products. For information about the specific options available for any Littelfuse product, please refer to the packaging details information within each product data sheet or contact your Littelfuse products representative.

Tape and Reel packaging per EIA-296:
Tape width is defined as the width of the tape and reeled fuse (x) as measured from inside tape to inside tape. Pitch is defined as the space between two tape and reeled fuses (y) as measured from lead to lead.

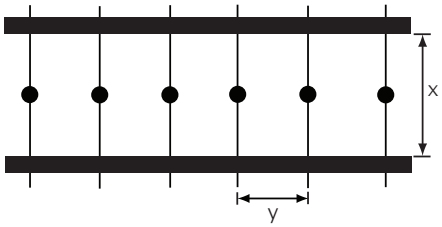

Littelfuse Wickmann Products Part Numbering System

1.-3.	4.	5.-7.	8.	9.	10.	Stelle digit	Explanation
3xx	X	XXX	X	X	X		
			0	4	3		**Packaging**
TR3 303						**0**	Tape, Ammopack 1.000 pcs. TR5®
							Tape, Ammopack
							Tape, Ammopack
TR5®							Tap, Rolle/ Reel
370						**1**	bulk, 1.000 pcs. TR5®
						2	bulk, 300 pcs., TR3 short leads
372						**3**	bulk, 200 pcs., TR3 long leads / TR®
382						**4**	bulk 1.400 pcs., only TE5® / T²CP / MP / IP
385						**5**	tape in bulk 100 pcs., only Picofuse 275
391						**6**	bulk 2.500 pcs., only Picofuse 275
950						**Y**	customized
373							
374							**Variant**
TE5®						**0**	Standard, long leads 18,8 mm
						1	long leads 18,8 mm, TR3
392						**2**	
395						**4**	short leads 4,3 mm
396						**5**	short leads 3,3 / 3,5 mm (special model)
T²CP 397							**Version**
						0	Standard
MP 398						**1**	varying production
						S	PIP Surface Mount (TR5 blister tape 2x500 pcs.)
IP 399							**Rated Current Specification**
							3-digit
						062	= 62mA
						100	= 100mA / 1A / 10A
						125	= 125A
Pico 275							
						0	< 1A
						1	≥ 1 - < 10A
						2	≥ 10 - < 100A
						3	≥ 100A

example 4.-7. digit
0062 = 62mA
0100 = 100mA
1100 = 1A
2100 = 10A
3125 = 125A

Legal Disclaimers

Liability

Littelfuse, Inc. its affiliates, agents, and employees, and all persons acting on its or their behalf (collectively, "Littelfuse"), disclaim any and all liability for any errors, inaccuracies or incompleteness contained here or in any other disclosure relating to any product. Littelfuse disclaims any and all liability arising out of the use or application of any product described herein or of any information provided herein to the maximum extent permitted by law. The product specifications do not expand or otherwise modify Littelfuse terms and conditions of purchase, including but not limited to the warranty expressed therein, which apply to these products.

Right to Make Changes

Littelfuse reserves the right to make any and all changes to the products described herein without notice.

Not Intended for Use in Life Support or Life Saving Applications

The products shown herein are not designed for use in life sustaining or life saving applications unless otherwise expressly indicated. Customers using or selling Littelfuse products not expressly indicated for use in such applications do so entirely at their own risk and agree to fully indemnify Littelfuse for any damages arising or resulting from such use or sale. Please contact authorized Littelfuse personnel to obtain terms and conditions regarding products designed for such applications.

Intellectual Property

No license, express or implied, by estoppel or otherwise, to any intellectual property rights is granted by this document or by any conduct of Littelfuse. Product names and markings noted herein may be registered trademarks of their respective owners. Littelfuse makes no representations or warranties of non-infringement or misappropriation of any third party intellectual property rights unless specifically provided for herein.

Disclaimer

Specifications, descriptions and data contained in this document are believed to be accurate. However, users should independently evaluate each product for the particular application. Littelfuse reserves the right to change any information contained herein without notice and may, at its sole discretion, change the design, manufacture or construction of any product. Visit www.littelfuse.com for the most up-to-date information. Littelfuse's only obligations for any of its products are specified in its Standard Terms and Conditions and Littelfuse shall not be liable for any indirect, consequential or incidental damages from any sale or use of any of its products.

Littelfuse®

Expertise Applied | Answers Delivered

littelfuse.com
circuitprotection@littelfuse.com

EC125Nv0115