Installation Instructions for
ISS-102C-M-LC Intrinsically-Safe Switch

WARNING: TO PREVENT IGNITION OF FLAMMABLE OR COMBUSTABLE ATMOSPHERES, DISCONNECT POWER FROM THE SYSTEM PRIOR TO INSTALLATION OR SERVICE.

CAUTION: Installation must comply with all national, state, and local codes. Installation of this equipment should only be performed by personnel trained in intrinsically-safe systems. Improper installation may result in serious injury or damage. Before proceeding with installation, read and understand these instructions completely.

The ISS-102 Isolated Switch has been evaluated by MSHA (18-ISA070001-0) as an associated apparatus for interfacing between hazardous and non-hazardous areas. The ISS-102 must be installed in a non-hazardous area. Consult MSHA for approval for use in any associated equipment, and follow SymCom's Control Drawing ISS-102C-M on the back of this sheet for proper installation.

All wiring connected to a hazardous location must be separated from all non-intrinsically-safe wiring. Description of special wiring methods can be found in the National Electrical Code ANSI/NFPA 70, Article 504 Intrinsically-Safe Systems. Check your state and local codes for additional requirements.

WARNING: REMOVE POWER FROM THE SYSTEM PRIOR TO INSTALLING OR SERVICING THE ISS-102.

Installation:

1. Mount the ISS-102 in a non-hazardous location by installing two #6 or #8 screws into the surface mounting holes provided.
2. Connect wiring per SymCom's Control Drawing ISS-102C-M (on following page). Follow all hazardous code requirements while installing wiring to switch input terminals.

Operation:

The ISS-102C-M-LC (Latching Controller) is a dual-input, single output (form C), pump controller with latching/differential logic. Both input channels are compatible with switches (float, pressure, etc.) and resistive probes (fixed 100kΩ threshold).

Each input channel is "active" when the corresponding switch is closed (or low resistance is detected, if using probes). When the LAG input (CH2) is activated, the output contact closes. Following latching/differential logic, the output contact remains closed until both the LEAD (CH1) and LAG (CH2) inputs are deactivated. The green RUN LED illuminates when the output relay is energized.

Wiring for the ISS-102C-M-LC input channels is as follows:

Pump Down Configuration:
Connect the LEAD input (**CH1**) to the **low** position, and the LAG input (**CH2**) to the **high** position. (Normally-open switches or resistive probes must be used.)

Pump Up Configuration:
Connect the LEAD input (**CH1**) to the **high** position, and the LAG input (**CH2**) to the **low** position. (Normally-closed switches only.)

Additional Features:
The input channels have a two-second debounce time delay to prevent nuisance actuation of the output relay.

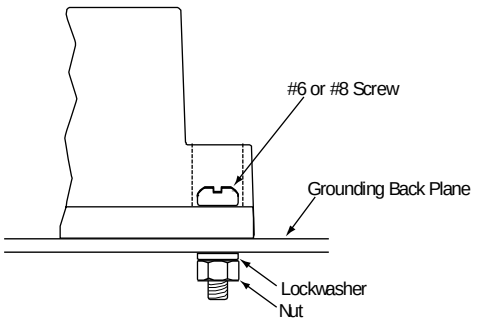

Figure 1: Connection to Ground Plane

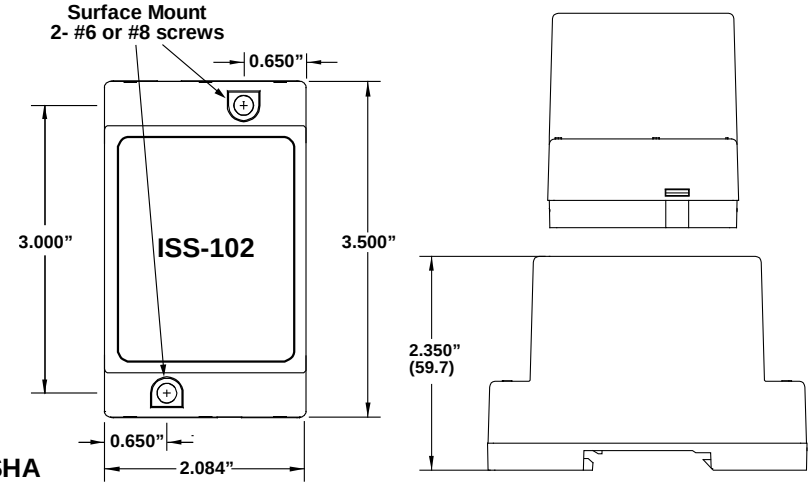

Figure 2: Dimensions

II-ISS-102CMLC-B

DO NOT CHANGE WITHOUT APPROVAL FROM MSHA

www.SymCom.com
...your electronic control & protection specialists

222 Disk Drive, Rapid City, SD 57701
(800) 843-8848 www.symcom.com

CONTROL DRAWING ISS-102C-M

Revision A

ASSOCIATED APPARATUS / APPAREILLAGE CONNEXE

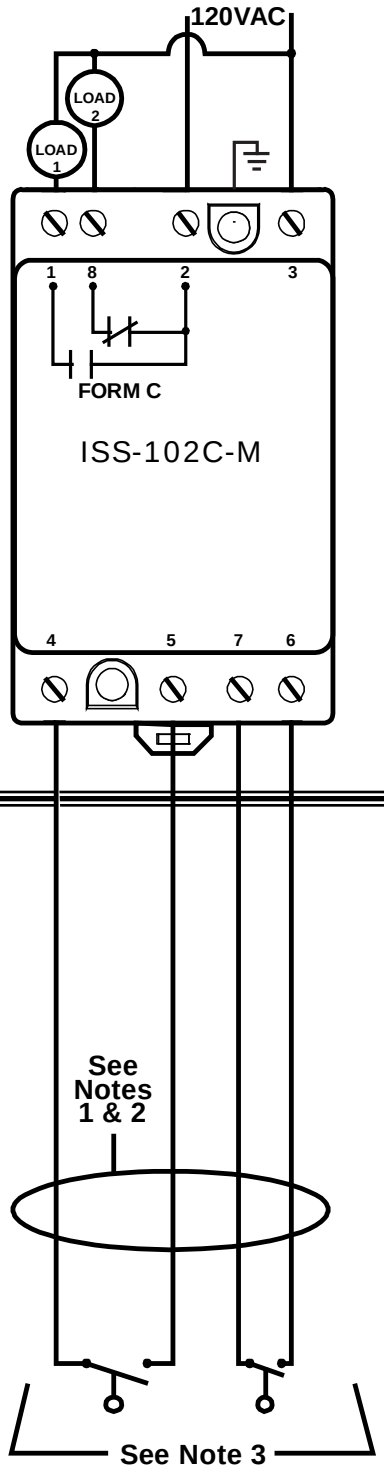

Non-Hazardous Location

Supply Voltage
120VAC (nominal)

Relay Output Rating
5 Amps @ 120VAC General Purpose
Pilot Duty 180VA @ 120VAC, C150

Maximum Ambient Temperature Rating
55°C

DEVICE MUST BE INSTALLED IN A SUITABLE ENCLOSURE

WARNING!

TO PREVENT IGNITION OF FLAMMABLE OR COMBUSTABLE ATMOSPHERES, DISCONNECT POWER BEFORE SERVICING.

DEVICE MAY ONLY BE REPAIRED BY THE MANUFACTURER

WARNING!

SUBSTITUTION OF COMPONENTS MAY IMPAIR INTRINSIC SAFETY.

AVERTISSEMENT!

LA SUBSTITUTION DE COMPOSANTS PEUT COMPROMETTRE LA SÉCURITÉ INTRINSÈQUE.

Hazardous Location

Class I, Divisions I & II, Groups A, B, C & D;
Class II, Divisions I & II, Groups E, F & G; and
Class III locations

NOTES:

1. Maximum distance between unit and switch contact is 10,000 feet.
2. All non-intrinsically-safe wiring shall be separated from intrinsically-safe wiring by a suitable barrier or minimum of 2 inches. Description of special wiring methods can be found in the National Electrical Code ANSI/NFPA 70, Article 504 Intrinsically-Safe Systems. Check your state and local codes for additional requirements.
3. All switch contacts shall be non-energy storing, containing no inductance or capacitance.
4. Entity Parameters:

V_{oc} = 16.8V	C_a = 0.39μF
I_{sc} = 1.2mA	$P_o = \frac{V_{oc} * I_{sc}}{4}$
L_a = 100mH	

5. Entity Parameter Relationships:

IS Equipment		Associated Apparatus
V_{max} (or U_i)	≥	V_{oc} or V_t (or U_o)
I_{max} (or I_i)	≥	I_{sc} or I_t (or I_o)
P_{max}, P_i	≥	P_o
$C_i + C_{cable}$	≤	C_a (or C_o)
$L_i + L_{cable}$	≤	L_a (or L_o)

Capacitance and inductance of the field wiring from the intrinsically-safe equipment to the associated apparatus shall be calculated and must be included in the system calculations as shown in the table above. Cable capacitance, C_{cable}, plus intrinsically-safe equipment capacitance, C_i, must be less than the marked capacitance, C_a (or C_o), shown on any associated apparatus used. The same applies for inductance (L_{cable}, L_i and L_a or L_o, respectively). Where the cable capacitance and inductance per foot are not known, the following values shall be used: C_{cable} = 60pF/ft., L_{cable} = 0.2μH/ft.

DO NOT CHANGE WITHOUT APPROVAL FROM MSHA

www.SymCom.com
...your electronic control & protection specialists

222 Disk Drive, Rapid City, SD 57701
(800) 843-8848 www.symcom.com