# Gas Discharge Tubes
# GTCX38-XXXM-R10 Series

Littelfuse Circuit Protection 8mm 3Pole GDTs (ceramic gas discharge tubes), are commonly used to help protect sensitive telecom equipment such as communication lines, signal lines and data transmission lines from damage caused by transient surge voltages that typically result from lightning strikes and equipment switching operations.

Littelfuse Circuit Protection GDTs offer a high level of surge protection, low capacitance and a broad array of breakover voltage levels, making them suitable for applications such as MDF (Main Distribution Frame) modules, high data-rate telecom applications (e.g. ADSL, VDSL), and surge protection on power lines. Littelfuse Circuit Protection GDTs can help equipment meet the most stringent regulatory standards.

## Benefits:

- Helps provide overvoltage fault protection against high energy surges
- Suitable for high-frequency applications

## Features:

- 3Pole, 8mm devices
- Broad voltage range from 75V-600V
- Various form factors: surface-mount, leaded, no leads
- Optional fail-short mechanism on some devices
- Low capacitance and insertion loss
- Crowbar overvoltage protection
- UL 497B recognized
- RoHS compliant
- Devices tested per ITU K.12 recommendations
- Non-radioactive materials

## Applications:

- Telecommunications
  - MDF modules, xDSL equipment, RF system protection, antenna, base station
- Industrial and consumer electronics, such as
  - Surge protectors
  - Alarm system

© 2016 Littelfuse,Inc.
Specifications are subject to change without notice.

# GTCX38-XXXM-R10 Series

## Device Voltage Ratings and Part Marking

| Part Number | DC Sparkover | Impulse Sparkover | | DC Holdover Voltage | On-State Voltage |
|---|---|---|---|---|---|
| | @100V/s ±20% Tolerance (V) | @100 Vμs (V) | @1000 Vμs (V) | Per ITU K.12 (<150ms) (V) | Nominal (@ 1A) (V) |
| GTCX38-750M-R10 | 75 | 450 | 550 | <52 | 20 |
| GTCX38-900M-R10 | 90 | 450 | 550 | <52 | 20 |
| GTCX38-141M-R10 | 140 | 500 | 600 | <80 | 20 |
| GTCX38-151M-R10 | 150 | 500 | 600 | <80 | 20 |
| GTCX38-201M-R10 | 200 | 600 | 700 | <135 | 20 |
| GTCX38-231M-R10 | 230 | 600 | 700 | <135 | 20 |
| GTCX38-251M-R10 | 250 | 600 | 700 | <135 | 20 |
| GTCX38-261M-R10 | 260 | 700 | 800 | <135 | 20 |
| GTCX38-301M-R10 | 300 | 800 | 900 | <150 | 20 |
| GTCX38-351M-R10 | 350 | 900 | 1000 | <150 | 20 |
| GTCX38-401M-R10 | 400 | 900 | 1000 | <150 | 20 |
| GTCX38-421M-R10 | 420 | 900 | 1000 | <150 | 20 |
| GTCX38-471M-R10 | 470 | 1050 | 1150 | <150 | 20 |
| GTCX38-501M-R10 | 500 | 1100 | 1200 | <150 | 20 |
| GTCX38-551M-R10 | 550 | 1300 | 1400 | <150 | 20 |
| GTCX38-601M-R10 | 600 | 1300 | 1400 | <150 | 20 |

## Device Surge Rating, Capacitance, Insulation Resistance, UL

| Part Number | Impulse Discharge Current | Impulse Life | AC Discharge Current (1sec duration; 10 hits) | Capacitance | Insulation Resistance | UL Rating |
|---|---|---|---|---|---|---|
| | 8x20μs 10 hits | 10x1000μs 300 hits | @50 Hz | @1Mhz | @100V* | UL497B #E179610 |
| GTCX38-XXXM-R10 | 10kA | 200A | 10Arms | <1pF | 10,000 (MΩ) | All Devices |

* Devices <=150V measured @ 50V.
Devices >= 500V measured @ 250V

© 2016 Littelfuse,Inc.
Specifications are subject to change without notice.

# GTCX38-XXXM-R10 Series

## Product Dimensions

**DIMENSIONS = MILLIMETERS [INCHES]**

Axial Leaded with- FS (GTCA38-XXXM-R10-FS2)

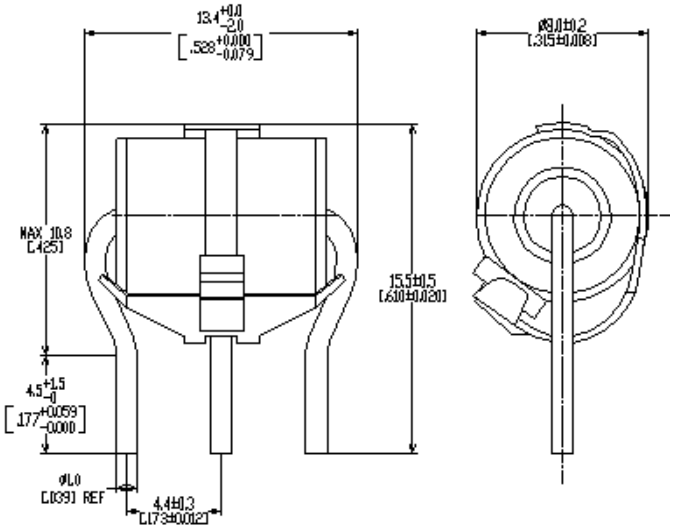


Axial Leaded with-FS (GTCA38-XXXM-R10-FS)

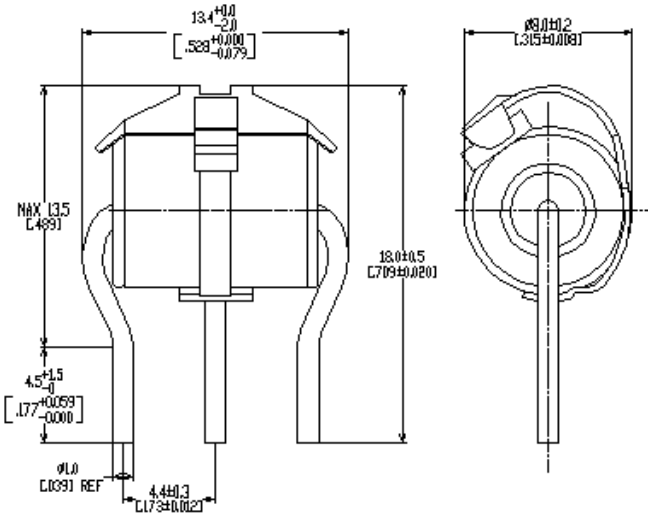


Axial Leaded with- FT (GTCA38-XXXM-R10-FT)

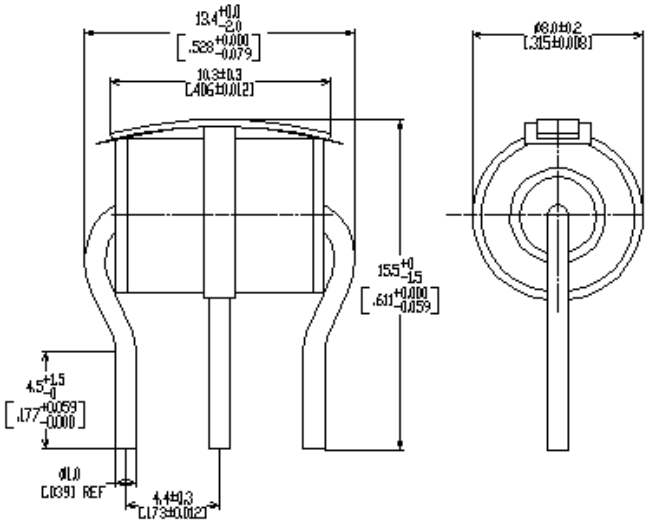


Axial Leaded (GTCA38-XXXM-R10)

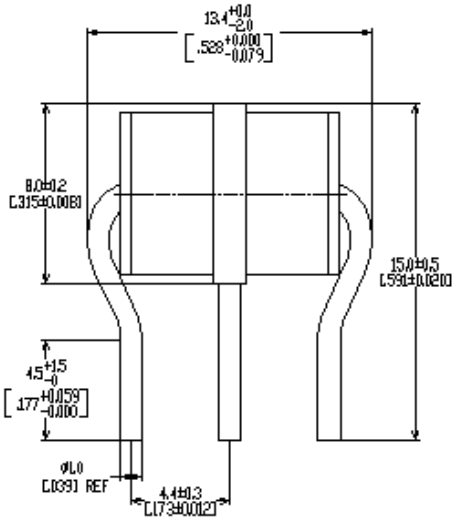


© 2016 Littelfuse,Inc.
Specifications are subject to change without notice.

# GTCX38-XXXM-R10 Series

### Radial Leaded with- FT (GTCR38-XXXM-R10-FT)

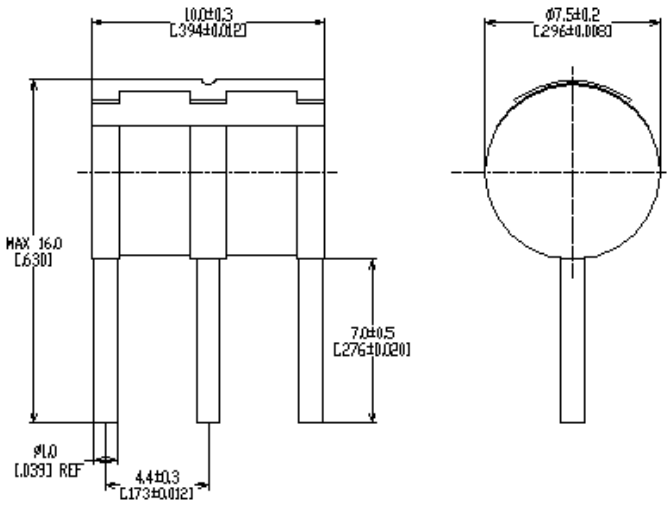


### Radial Leaded with-FS (GTCR38-XXXM-R10-FS2)

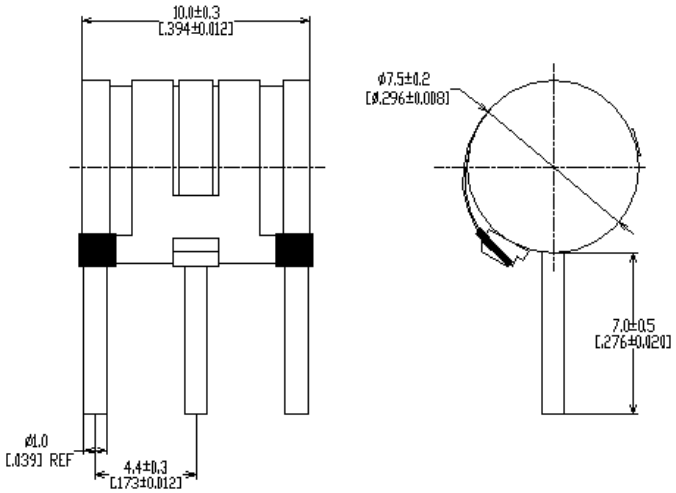


### Radial Leaded with-FS (GTCR38-XXXM-R10-FS)

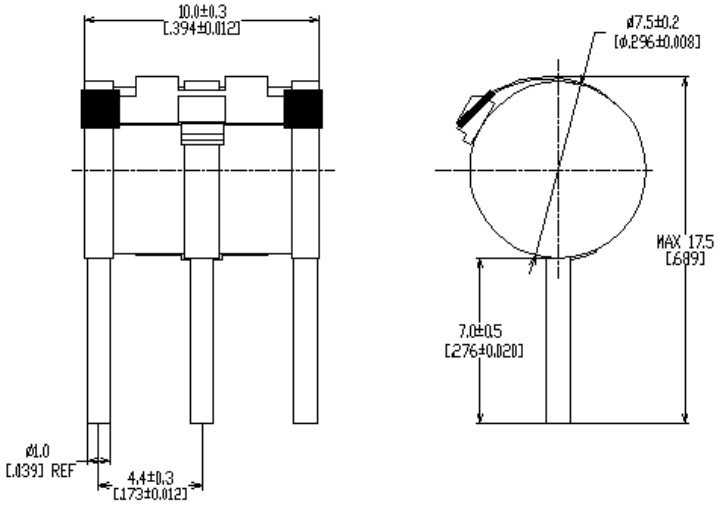


### Radial Leaded (GTCR38-XXXM-R10)

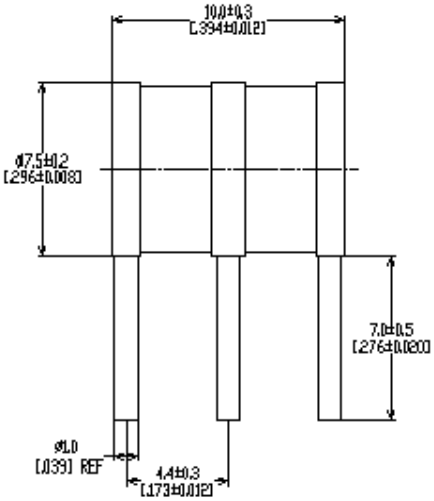


© 2016 Littelfuse,Inc.
Specifications are subject to change without notice.

# GTCX38-XXXM-R10 Series

### No Leads with-FT (GTCN38-XXXM-R10-FT)

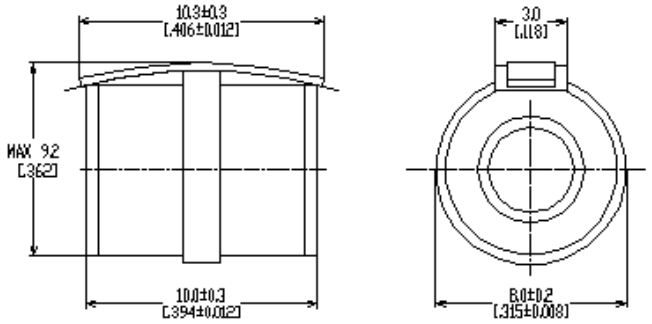


### No Leads (GTCN38-XXXM-R10)

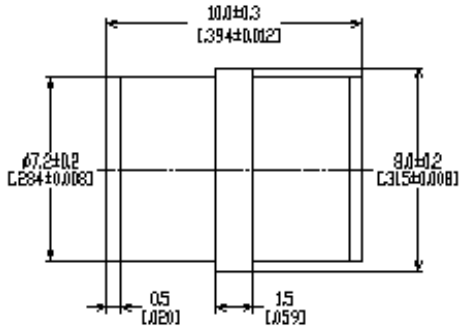


### Surface-mount (GTCS38-XXXM-R10)

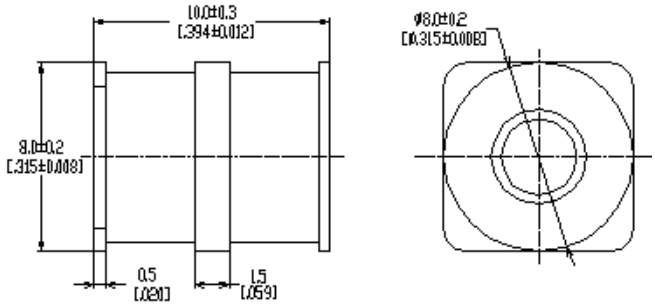


## Pad Layout – Surface-mount Devices (GTCS38-XXXM-R10)

| | X | Y1 | Y2 | Z1 | Z2 |
|---|---|---|---|---|---|
| | NOM | NOM | NOM | NOM | NOM |
| mm: | 9.0 | 4.65 | 4.65 | 2.5 | 1.5 |
| in*: | (0.354) | (0.183) | (0.183) | (0.098) | (0.059) |

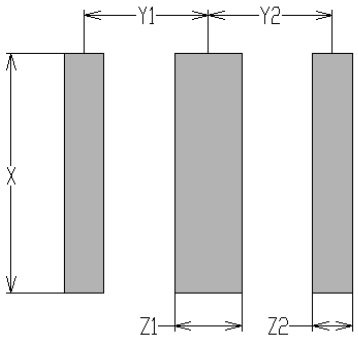


© 2016 Littelfuse,Inc.
Specifications are subject to change without notice.

# GTCX38-XXXM-R10 Series

## General Characteristics

No Radioactive Material
Storage Temperature: -40ºC to +90ºC
Operating Temperature: -40ºC to +90ºC
Body: Nickel Plated
Leads: Surface-mount, Radial and Axial Devices: Tin Plated
Devices with no leads: Nickel Plated
*Soldering Notes: Devices with no leads: non-solderable; suitable for insertion into a magazine clip*

## Materials Information

| RoHS Compliant | ELV Compliant |
|---|---|
| Directive 2002/95/EC Compliant | Directive 2000/53/EC Compliant |

## Packaging Information

| Part Description | | Tray / Reel | Standard Package |
|---|---|---|---|
| No Leaded: | GTCN38-XXXM-R10(-FT) | 100pcs (Tray) | 1,000pcs |
| With Leads: | GTCA38-XXXM-R10(-FT/-FS(2))<br>GTCR38-XXXM-R10(-FT/-FS(2)) | 100pcs (Tray) | 1,000pcs |
| Surface-mount: | GTCS38-XXXM-R10(-FT) | 100pcs (Tray) | 1,000pcs |
| Surface-mount (T&R): | GTCS38-XXXM-R10-2 | 500pcs (Reel) | 3,000pcs |

## Part Numbering System

### Example Part Number: GTCX38-351M-R10-FT/FS/ FS2

| | |
|---|---|
| GT = | Gas Tube |
| C = | Ceramic |
| X = | Lead Configuration: **N**= No leads; **A**= Axial Leads; **S**= Surface-mount; **T**= T Configuration Leads; R= Radial Leads |
| 3 = | 3 Electrode device |
| 8 = | 8mm Diameter |
| 351 = | DC Spark Over Voltage of 350V (at 100V/s) |
| M = | Tolerance of 20% on DC Spark Over Voltage |
| R = | Product Family Designator |
| 10 = | Surge rating: 8x20µs 10kA 10 times |
| FT/FS/FS2 = | With Fail-Short mechanism (FT=plastic fail short mechanism on top; FS=solder pellet fail short mechanism on top; FS2=solder pellet fail short mechanism on bottom) |

© 2016 Littelfuse,Inc.
Specifications are subject to change without notice.

# GTCX38-XXXM-R10 Series

## Part Marking Reference

**Example Part Marking: XX 35 R10 GN**

| | |
|---|---|
| XX = | Manufacture Mark |
| 35 = | Voltage Designator (35 = 350V) |
| R10 = | Product Family Designator + Surge Current 10kA (8x20µs 10 hits) |
| GN = | Year and Week of Manufacture |

Littelfuse products are not designed for, and shall not be used for, any purpose (including, without limitation, automotive, military, aerospace, medical, life-saving, life-sustaining or nuclear facility applications, devices intended for surgical implant into the body, or any other application in which the failure or lack of desired operation of the product may result in personal injury, death, or property damage) other than those expressly set forth in applicable Littelfuse product documentation. Warranties granted by Littelfuse shall be deemed void for products used for any purpose not expressly set forth in applicable Littelfuse documentation. Littelfuse shall not be liable for any claims or damages arising out of products used in applications not expressly intended by Littelfuse as set forth in applicable Littelfuse documentation. The sale and use of Littelfuse products is subject to Littelfuse Terms and Conditions of Sale, unless otherwise agreed by Littelfuse.