GC-13 : SPLITTER-BOX DUAL-CABLE MONITORING WITH AN SE-135

An SE-135 Ground-Fault Ground-Check Monitor can protect the cables entering and leaving a dual-cable splitter box (junction box), when one is terminated with an SE-TA24A and the other with an SE-TA24B Termination Assembly. The SE-MUX was previously used to monitor two ground-check circuits by sampling each ground-check circuit every half second. As a result, ground-check trip times were increased by up to a half second. The improved method provides continuous monitoring of both ground-check circuits; therefore ground-check trip times are not increased, and the complexity of splitter boxes is reduced. Littelfuse recommends replacing the SE-MUX in splitter-box applications with an SE-TA24A and an SE-TA24B, as shown in Fig. 1.

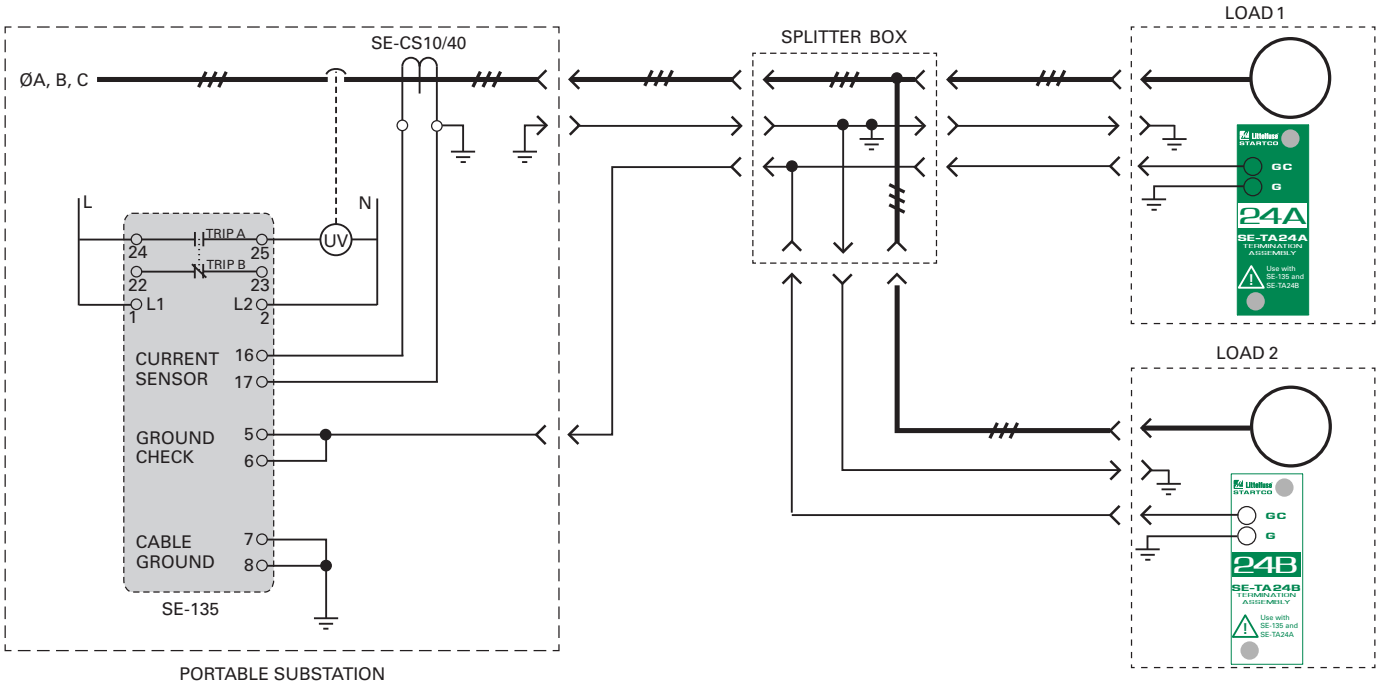

Figure 1: Simplified Connection Diagram

When an SE-TA24A and an SE-TA24B are used as a set, the parallel combination has the 12-V Zener characteristic required by the SE-135 as a valid ground-check-loop termination. An open or short in the ground-check loop of either cable will result in an SE-135 ground-check trip; no indication is provided of which cable is faulted.

To be able to energize either single cable independently, a live-end cover fitted with an SE-TA24A or an SE-TA24B, as required, must be available at the splitter box.

WARNING:

Take proper care to prevent an SE-TA12A-series termination assembly from being used in a dual-termination application with an SE-135. Because a single SE-TA12A will satisfy the SE-135, if an SE-TA12A terminates one (or both) of the cables on a splitter-box application with an SE-135, the second cable will not be monitored. This can result in a hazardous condition on the unmonitored cable, where an energized open cable/coupler, an open ground connection, or a shorted ground-check loop would not be detected. See Fig. 2 for a sample warning label that could be applied to each cable coupler or beside each SE-TA24A and SE-TA24B installation location.

© 2020 Littelfuse

GC-13 : SPLITTER-BOX DUAL-CABLE MONITORING WITH AN SE-135

To avoid confusion on dual-cable and splitter-box applications, the SE-TA24A has a green label with 24A shown in large white print, and the SE-TA24B has a white label with 24B shown in large green print. See Fig. 3.

For new applications, or those where UL, CSA, or CE labeling is required on the termination assemblies, consider the SE-134C Ground-Fault Ground-Check Monitor and SE-TA12A and SE-TA12B Termination Assemblies. This technology also has one advantage in an application where the SE-MUX and SE-TA12A Termination Assemblies were previously used: a single SE-TA12A does not satisfy the SE-134C. See Technical Note GC-09: Splitter-Box Dual-Cable Monitoring (http://www.littelfuse.com/splitterbox-gc).

WARNING

THIS EQUIPMENT IS PART OF A SPLITTER-BOX/DUAL-CABLE APPLICATION.
USE ONLY SE-TA24A (GREEN LABEL) OR SE-TA24B (WHITE LABEL) TERMINATION ASSEMBLIES.
USE OF ANY OTHER TERMINATION ASSEMBLY COULD RESULT IN HAZARDOUS CONDITION.

Figure 2: Sample Warning Label

Figure 3: SE-TA24A and SE-TA24B Termination Assemblies

© 2020 Littelfuse